stingray™

Exploded views / Part lists

Rev. date (11.2017)

On the following pages you will find the parts used to assemble this product. Please note that some spare parts cannot be purchased individually but are part of a complete kit. Please also note that for some spare parts extra delivery time may occur.

R82 A/S
Parallelvej 3
8751 Gedved
Denmark

Tel: +45 79 68 58 88
Fax: +45 75 66 51 92
R82@R82.dk
Web: R82.org

Cvr. Nr.: 16 20 21 85
Swift: JYBA DKKK
Iban No.:DK8072450002003501

Contents

Seat 3
Frame with small front wheels 6-15
Frame with large front wheels 16-22
Accessories
Transport fittings 23
Folding top 25
Hip supports 27
Hip supports, multi-adjustable 29
Side supports 31
Vent tray 33
Pommel 35
Tray 37
Tray, grey 39
Hand brace 41

R82 A/S
Parallelvej 3
8751 Gedved
Denmark

Tel: +45 79 68 58 88
Fax: +45 75 66 51 92
R82@R82.dk
Web: R82.org

Cvr. Nr.: 16 20 21 85
Swift: JYBA DKKK
Iban No.:DK8072450002003501

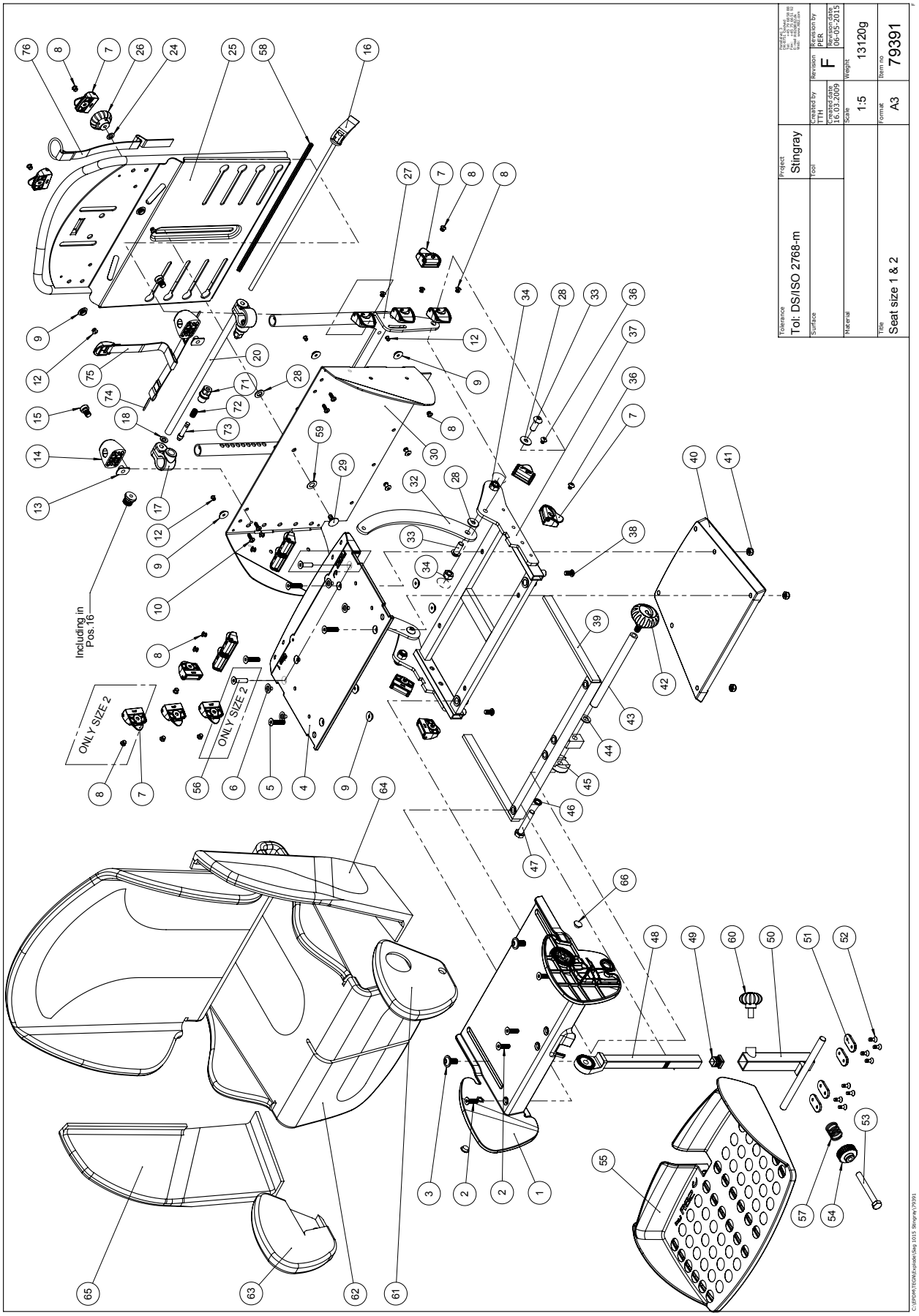
Including in Pos.16
ONLY SIZE 2
ONLY SIZE 2
Tolerance
Tol: DS/ISO 2768-m
Surface
Material
Title
Seat size 1 & 2
Project
Stingray
Goal
Created by
TTH
Created date
16.03.2009
Revision
F
Revision by
PER
Revision date
06-05-2015
Scale
1:5
Weight
13120g
Format
A3
Item no
79391

Position	No.	Description	Quantity	Unit of Measure	Ean code
1	76094	Moveable plate, Seat 2	PCS	1	5707292489234
1	76092	Moveable plate Seat 1	PCS	1	5707292481689
2	0609730	Stainless insex 6*20 uh.	PCS	4	5707292138507
3	0661800	Button head w/flange 8*20	PCS	2	5707292408075
4	76093	Fixed Seat 2	PCS	1	5707292489227
4	76091	Fixed Seat 1	PCS	1	5707292488848
5	0609735	Stainless insex screw M6 x35mm	PCS	4	5707292138521
6	0450053	Rivet for press stud	PCS	4	5707292514493
7	75306	Snap lock R82 25	PCS	18	5707292437624
8	0506507	Blindnitte 4,8*10 Alu/nirosta	PCS	18	5707292516725
9	0450052	Ball f. Pushbutton	PCS	10	5707292452313
10	0506513	Stainless blind rivet Ø4, 8*12	PCS	4	5707292137326
12	0504601	Popnitte tap 3,2*8,0	PCS	6	5707292552334
13	1600524	Stainl. Welding nut w/flange	PCS	2	5707292503541
14	76107	Tube for fix plate, back	PCS	2	5707292488626
15	0609744	Stainless insex 6*14 ch.	PCS	2	5707292418234
16	3515101	Handle size 2 angel adjustment	PCS	1	5707292516114
16	3515100	Handle size 1 angel adjustment	PCS	1	5707292516107
17	76122	Slide bearing, back	PCS	2	5707292488459
18	1130600	Stainless washer 6mm	PCS	2	5707292140517
20	76126	Tube f. Angel adjustment size2	PCS	1	5707292489241
20	76124	Tube f. Angel adjustment size1	PCS	1	5707292488466
24	1100490	Spring washer M6 stainless	PCS	1	5707292411297
25	76113	Moveable back 2	PCS	1	5707292488725
25	76110	Moveable back 1	PCS	1	5707292488695
26	3470351	R82 handle M6*10mm nut	PCS	1	5707292413895
27	76108	Brace for fix back 2	PCS	1	5707292488619
27	76101	Brace for fix back 1	PCS	1	5707292488497
28	1310711	Nylon washer 15x8,4x1,5mm	PCS	5	5707292429933
29	1905016	Board bolt 6*16mm, stainless	PCS	1	5707292503732
30	76119	Plate for fix back 2	PCS	1	5707292488633
30	76106	Plate for fix back 1	PCS	1	5707292488657
32	76121	Carrier for back size 2	PCS	2	5707292488442
32	76120	Carrier for back size 1	PCS	2	5707292503602
33	0662000	Button head screw 8*20 stainl.	PCS	4	5707292139573
34	1631080	Stainless lock nut 8mm	PCS	4	5707292141453
36	0631952	Button head M5*6, rf tuflok	PCS	4	5707292503725
37	76087	Seat frame 2	PCS	1	5707292489036
37	76081	Seat frame 1	PCS	1	5707292488794
38	0602195	Insex M6*12 stainless	PCS	2	5707292404701
39	115174	Seat extention frame, size 2	PCS	1	5707292605849
39	115157	Seat extention frame, size 1	PCS	1	5707292605863
40	110181	Adaper plate for Stingray	PCS	1	5707292598158
41	1631060	Stainless lock nut 6mm	PCS	4	5707292141446
42	3502545	R82 handle dia.45 M8*15mm	PCS	1	5707292450456
43	76129	Tube f. Angle adjustment size2	PCS	1	5707292503848
43	76134	Tube f. angel adjustment size1	PCS	1	5707292503626
44	1105080	Stainless washer 8mm	PCS	1	5707292140364
45	75329	Tooth disk Ø30x10	PCS	1	5707292482389

R82 A/S
Parallelvej 3
8751 Gedved
Denmark

Tel: +45 79 68 58 88
Fax: +45 75 66 51 92
R82@R82.dk
Web: R82.org

Cvr. Nr.: 16 20 21 85
Swift: JYBA DKKK
Iban No.:DK8072450002003501

46	1100495	Spring washer M8	PCS	1	5707292458674
47	1073658	Steelbolt M8*45 rustfri	PCS	1	5707292503718
48	114291	Rod size 1 for footrest	PCS	1	5707292605764
48	114292	Rod size 0 for footrest	PCS	1	5707292605788
49	2504000	Ferrule e15*1,0-2,0 int.black	PCS	1	5707292144102
50	101035	Carrier bracket	PCS	1	5707292554888
51	82950	Hollow plate 16*32, Wombat	PCS	4	5707292126030
52	1940017	Sheet metal screw uhx4,2*13fzb	PCS	8	5707292142597
53	1073659	Steelbolt M8*65 rustfri	PCS	1	5707292514318
54	3470472	Handle M8*35	PCS	1	5707292513892
55	76270	Foot rest	PCS	1	5707292503695
56	0609728	Insex, stainless 6*16 uh	PCS	2	5707292138491
57	0310113	Stainless spring1,2*16indv.*20	PCS	1	5707292453143
58	4012000	Protection band	MTR	0,32	5707292516909
59	1310645	Washer, nature Ø16*8*0,5mm	PCS	1	5707292446015
60	3503001	R82 handle M8x15mm screw	PCS	1	5707292413925
66	1310528	Covering stud, black 13mm	PCS	2	5707292470348
71	100367	Spring case	PCS	2	5707292550163
72	100366	Locking pin	PCS	2	5707292550156
73	0310100	Pressure spring 0,9*8*23*10,5v	PCS	2	5707292135513
74	0216000	Ring f.connectinglink 20*1,5mm	PCS	2	5707292135230
75	102255	Strap, bottom for back release	PCS	1	5707292630384
75	102250	Strap, bottom for back release	PCS	1	5707292572660
76	102229	Strap for back release	PCS	1	5707292567925

R82 A/S
Parallelvej 3
8751 Gedved
Denmark

Tel: +45 79 68 58 88
Fax: +45 75 66 51 92
R82@R82.dk
Web: R82.org

Cvr. Nr.: 16 20 21 85
Swift: JYBA DKKK
Iban No.:DK8072450002003501

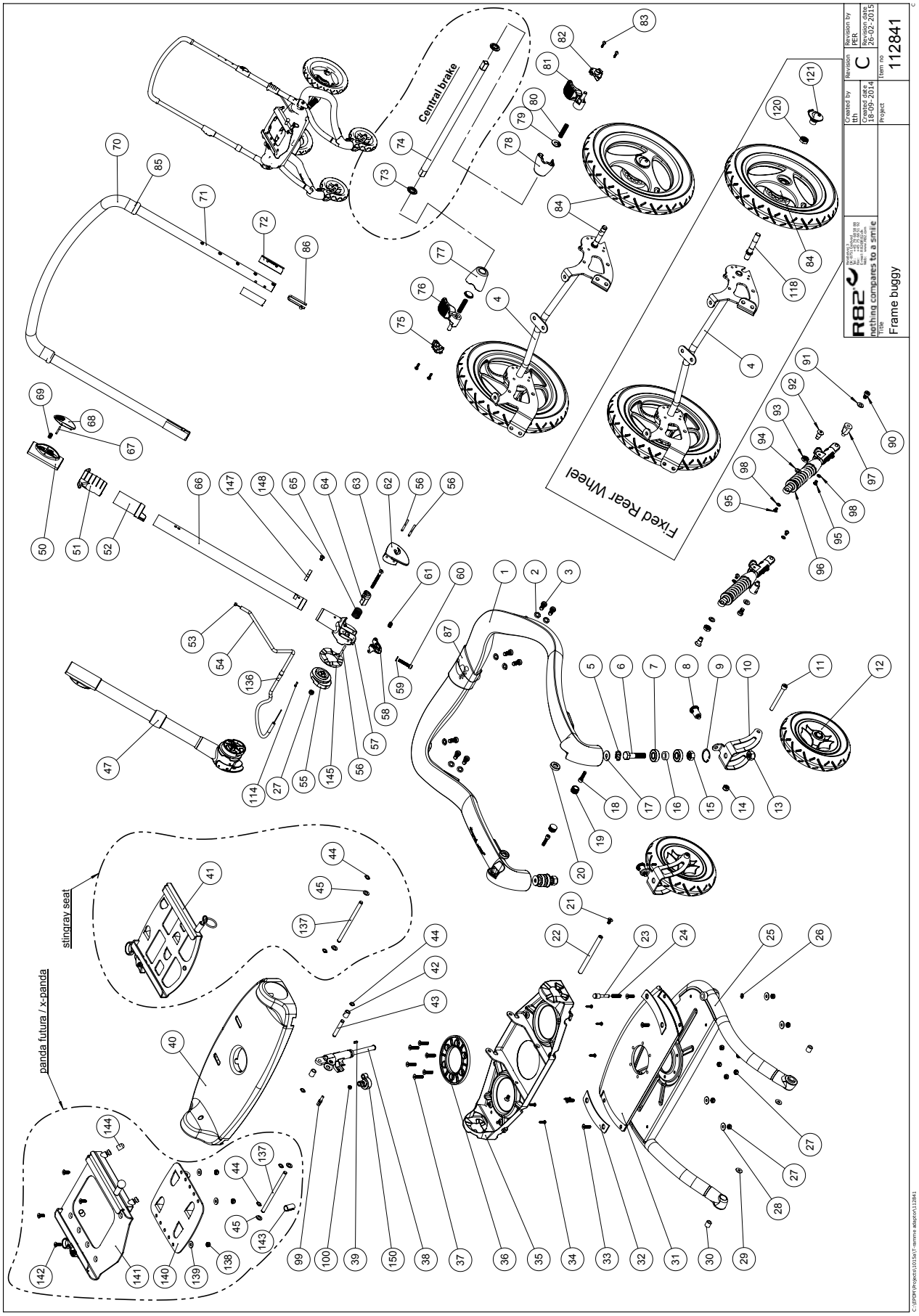
Central brake
Fixed Rear Wheel
stingray seat
panda futura / x-panda
Created by
tth
Created date
18-09-2014
Revision
C
Revision by
PER
Revision date
26-02-2015
Project
Item no
112841
Title
Frame buggy
nothing compares to a smile

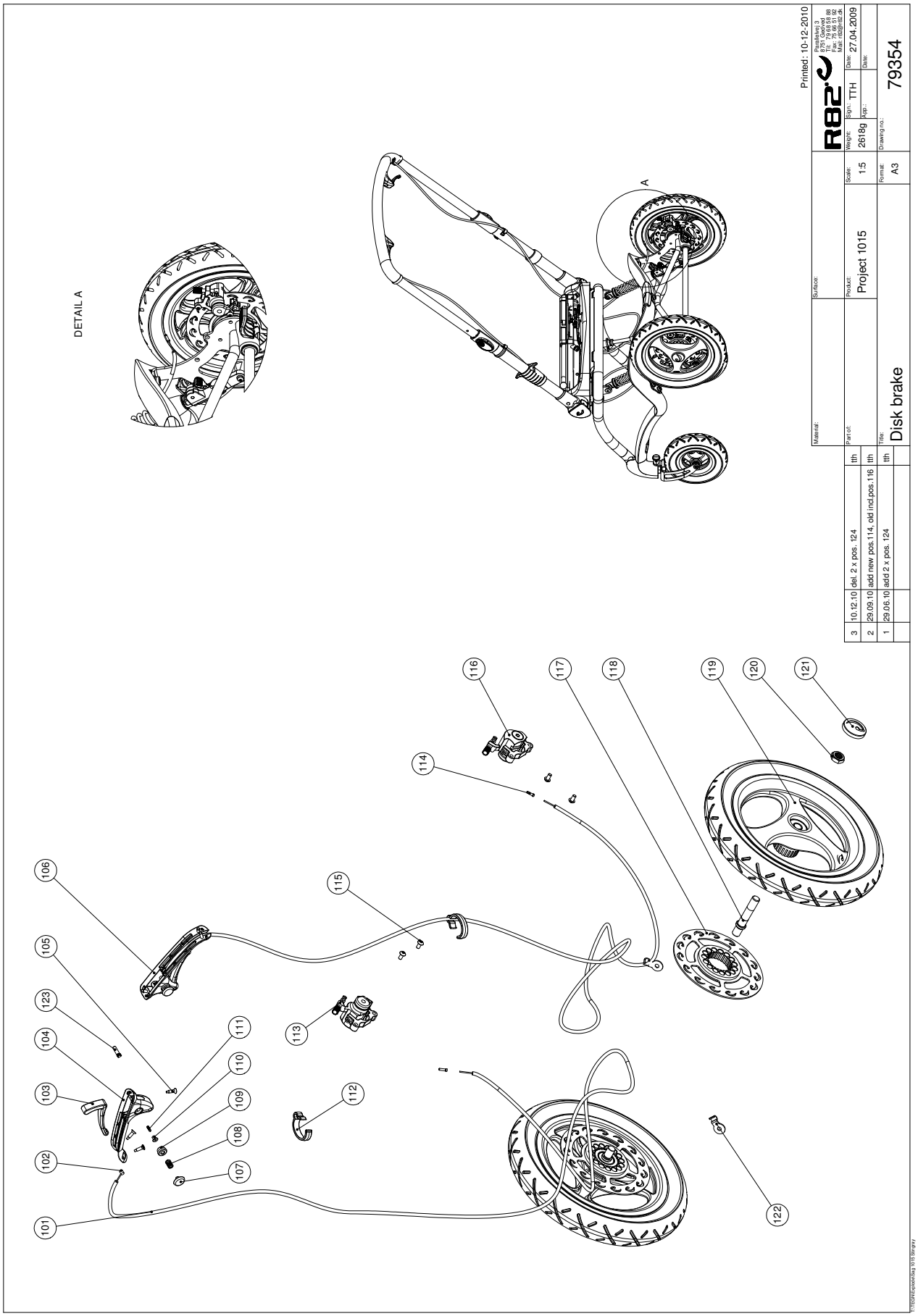
DETAIL A
A
101
102
103
104
105
106
107
108
109
110
111
112
113
114
115
116
117
118
119
120
121
122
123
Printed: 10-12-2010
R82
Parallelvej 3
8751 Gedved
Tlf.: +45 79 68 58 88
Fax: 75 66 51 92
Mail: r82@r82.dk
Date: 27.04.2009
Date:
Sign.: TTH
App.:
Weight: 2618g
Scale: 1:5
Format: A3
Drawing no.: 79354
Product: Project 1015
Part of:
Surface:
Material:
Title: Disk brake
3 10.12.10 del. 2 x pos. 124 tth
2 29.09.10 add new pos.114, old incl.pos.116 tth
1 29.06.10 add 2 x pos. 124 tth

Position	No.	Description	Quantity	Unit of Measure	Ean code
1+87	112397	Carbon frame with Stepcover	PCS	1	5707292591012
2	1100500	Spring washer 8mm, stainless	PCS	8	5707292140142
3	0609816	Stainless insex screw 8*16	PCS	8	5707292138569
4	76027	Rear wheel suspension, black	PCS	1	5707292476623
5	6108151	Spring screw 23,55*8,74	PCS	2	5707292523617
6	0607999	Stainless Insex screw 12*50	PCS	2	5707292482013
7	2985220	Ball bearing for bearing house	PCS	4	5707292145420
8	0380184	Spec. Locking house M10*1,28mm	PCS	2	5707292366030
9	1100221	Locking ring for 30mm drilling	PCS	2	5707292502001
10	76051-1	Front fork new buggy	PCS	2	5707292546876
11	0602494	Insex M8*75, stainless	PCS	2	5707292502056
12	3004040	Ø190 wheel with air	PCS	2	5707292475060
12	3004050	Ø190 wheel massive	PCS	2	5707292475077
13	1631120	Stainless lock nut 12mm	PCS	2	5707292502049
14	1631080	Stainless lock nut 8mm	PCS	2	5707292141453
15	1606002	Nut M12*1-1,25 stainless steel	PCS	2	5707292502100
16	76052	Bush for front wheel bearing	PCS	2	5707292481542
17	1108000	Washer 8mm	PCS	2	5707292140388
18	0602426	Insex M6*25 rustfri, eslok	PCS	2	5707292539854
19	2501550	Blind cap 18	PCS	2	5707292502254
20	76008	Bush for knee, pom	PCS	2	5707292481085
21	0621200	Insex screw 6*12mm	PCS	2	5707292138958
22	76042	Axle for springstopper	PCS	1	5707292491497
23	111480	Stop pin	PCS	1	5707292590206
24	0308714	Stainless spring 1,3*7*23 5½V	PCS	1	5707292521040
26	1145050	Lock washer 5mm axle	PCS	1	5707292140579
27	1631060	Stainless lock nut 6mm	PCS	2	5707292141446
29	1101950	Washer Ø6,1-16*1 mm, FZB	PCS	2	5707292140210
30	76018	Bush for knee joint	PCS	2	5707292481245
34	1940039	Eco-syn z 4*16 stainless	PCS	8	5707292502070
38	2207040	Springstopper l=102/22	PCS	1	5707292473127
39	0388006	Screwnipple 5*7,5mm	PCS	1	5707292136114
40	76034	Cover for bridge	PCS	1	5707292476838
41	110176	T-frame for Stingray	PCS	1	5707292598141
42	1350024	Distance piece 14*15*8,2mm	PCS	2	5707292140920
43	76043	Axle for springstopper	PCS	1	5707292481450
44	1145060	Locking washer, axle stainless	PCS	4	5707292375056
45	1310711	Nylon washer 15x8,4x1,5mm	PCS	2	5707292429933
50	76220	Height adjustment	PCS	2	5707292491718
51	76231	Handle for tilt in space	PCS	1	5707292491855
53	0371854-1	Soft inner cable for Stingray	PCS	1	5707292536945
54	5002995	Cable for tilt of seat	PCS	1	5707292542724
55	76064	Eccentric for lock	PCS	2	5707292481627
56	0530009	Cyl.pin Ø4*50 mm stainless	PCS	4	5707292502445
58	76066	Safety lock for handbrace	PCS	2	5707292491558
61	0310122	Compression spring 0,9*8u	PCS	2	5707292135544
62	76062	Handle of a lock R82	PCS	2	5707292481603
63	0641637	Button head M6*60 stainless	PCS	2	5707292540317
64	76063	Handle of a lock	PCS	2	5707292481610

65	0308711	Stainless spring 2,0*16*20mm	PCS	2	5707292502018
67	0530011	Pin Ø3x32 mm.	PCS	2	5707292516220
68	76221	Push button for push brace	PCS	2	5707292491725
69	0310125	Pressure spring 0,9*8u/Ø12+0,5	PCS	2	5707292135575
72	76229	Bearing lining	PCS	4	5707292491824
73	76145	Bush for connecting shaft	PCS	2	5707292491688
74	76149	Connecting shaft, for brake	PCS	1	5707292491794
75	76141	Bottom right, brake	PCS	1	5707292491589
76	114300	Pedal right for brake	PCS	1	5707292605030
77	76143	House right, for brake	PCS	1	5707292491633
78	76148	House left, for brake	PCS	1	5707292491787
79	76144	Cover for spring, brake	PCS	2	5707292491657
80	0308713	Stainless spring 1,0*6*40mm*17	PCS	2	5707292502032
81	114304	Pedal left for brake	PCS	1	5707292605047
82	76146	Bottom left, for brake	PCS	1	5707292491749
83	1940039	Eco-syn z 4*16 stainless	PCS	4	5707292502070
84	3004020	Ø290 wheel air w. quick releas	PCS	2	5707292475046
84	3004030	Ø290 wheel pu. w.quick release	PCS	2	5707292475053
84	3004026	Ø290 wheel air, fixed axle	PCS	2	5707292525628
84	3004034	Ø290 solid racing, fixed axle	PCS	2	5707292525635
86	6153550	Knob spring Ø 7.5x5.5 mm	PCS	2	5707292513717
90	0609816	Stainless insex screw 8*16	PCS	2	5707292138569
91	1105080	Stainless washer 8mm	PCS	2	5707292140364
94	1105080	Stainless washer 8mm	PCS	2	5707292140364
95	0602008	Stainless insex M5*10	PCS	4	5707292542762
96	113790	damper with red hammer	PCS	2	5707292601407
97	76069	Distance bush	PCS	2	5707292481641
98	1130500	Stainless washer M5, din9021	PCS	4	5707292516343
99	0381000	cable adjuster with nut only	PCS	1	5707292544018
100	1602800	Steelnut 5mm, FZB	PCS	1	5707292141262
101	5102999	Index Casing for stingray	PCS	2	5707292542755
105	1811105	Screw 4.2x16uh, stainless	PCS	6	5707292141699
112	76156	Cable retainer	PCS	2	5707292510280
113	3503538	Disk brake right dM60	PCS	1	5707292518460
114	0387000	End nipple for outer casing	PCS	3	5707292136091
115	0602195	Insex M6*12 stainless	PCS	4	5707292404701
116	3503539	Disk brake dM60 left	PCS	1	5707292518484
118	76151	Axle for disk brake	PCS	2	5707292535351
120	1607005	Locknut 12 mm, A2	PCS	2	5707292535368
121	3004065	Cover for 12½" wheel	PCS	2	5707292520203
122	76238	Bracket	PCS	2	5707292518682
136	0235073	Cable entry with talkum	PCS	1	5707292581617
137	76314	Axle for T-frame	PCS	1	5707292538604
145	76038	Support disc Stingray	PCS	2	5707292540324
150	102060	Cabel Holder	PCS	1	5707292561336
180	0602007	Stainless insex M5*10	PCS	2	5707292542779
117+119	3004037	ø290 Air racing, with disk	PCS	2	5707292544803
117+119	3004027	ø290 PUR Racing, with disk	PCS	2	5707292544797
117-119	3004027	ø290 PUR Racing, with disk	PCS	2	5707292544797
Module	5087036	Upperpart Push brace	PCS	1	5707292536273

Module	5087037-1	Lower part left, Push brace	PCS	1	5707292544032
Module	5087038-1	Lower part right, Push brace	PCS	1	5707292544049
Module	5087024	Bearing insert for turn. wheel	PCS	2	5707292509727
Module	5087030-1	Upper frame mounted, black	PCS	1	5707292587046
Module	5087040	Handle of a lock R82 mounted	PCS	2	5707292510471
Module	5076236	Holder for brake,right mounted	PCS	1	5707292525420
Module	5076235	Holder for brake, left mounted	PCS	1	5707292525413

R82 A/S
Parallelvej 3
8751 Gedved
Denmark

Tel: +45 79 68 58 88
Fax: +45 75 66 51 92
R82@R82.dk
Web: R82.org

Cvr. Nr.: 16 20 21 85
Swift: JYBA DKKK
Iban No.:DK8072450002003501

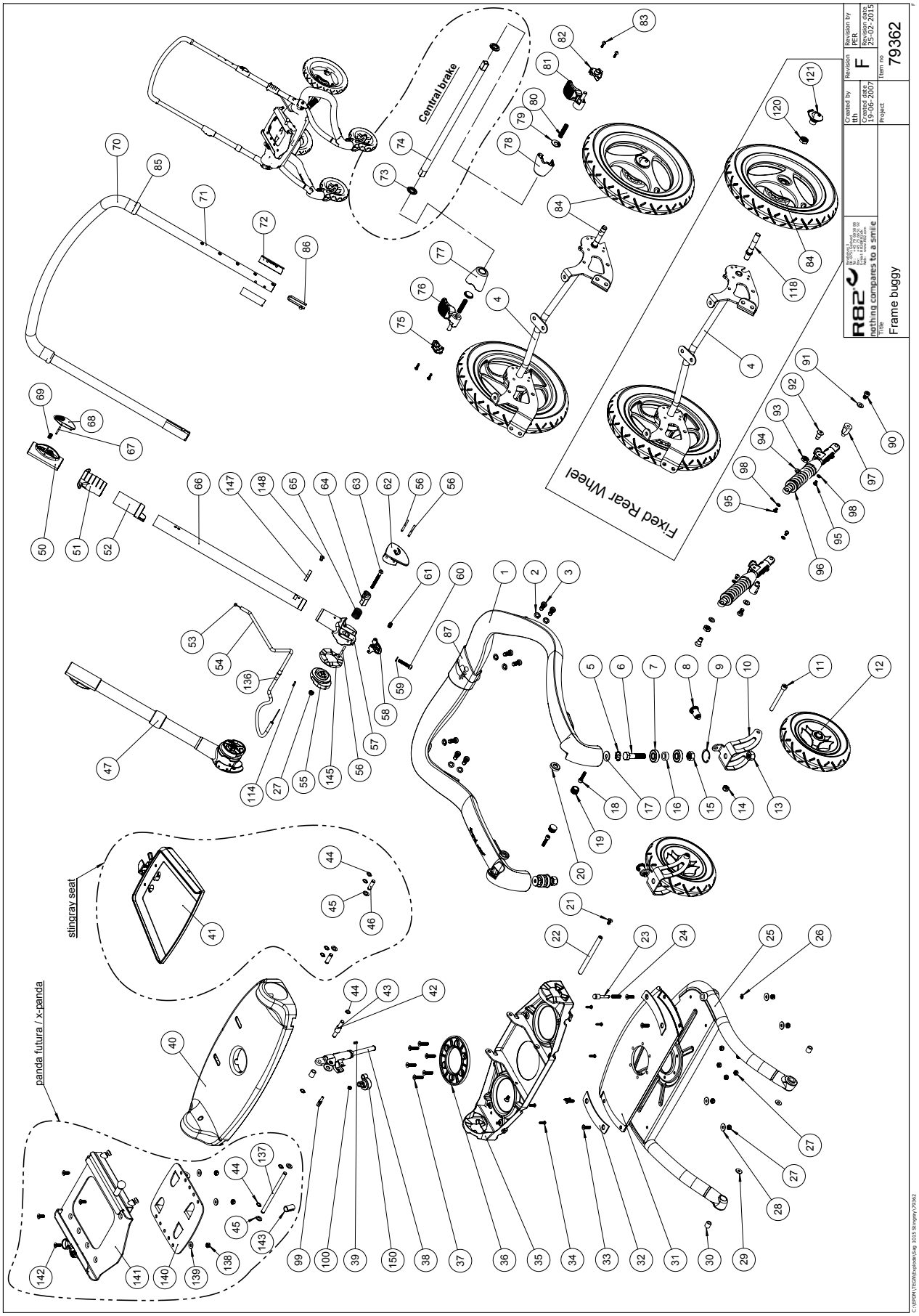
Central brake
Fixed Rear Wheel
stingray seat
panda futura / x-panda
Created by
tth
Created date
19-06-2007
Revision
F
Revision by
PER
Revision date
25-02-2015
Project
Item no
79362
R82
nothing compares to a smile
Title
Frame buggy

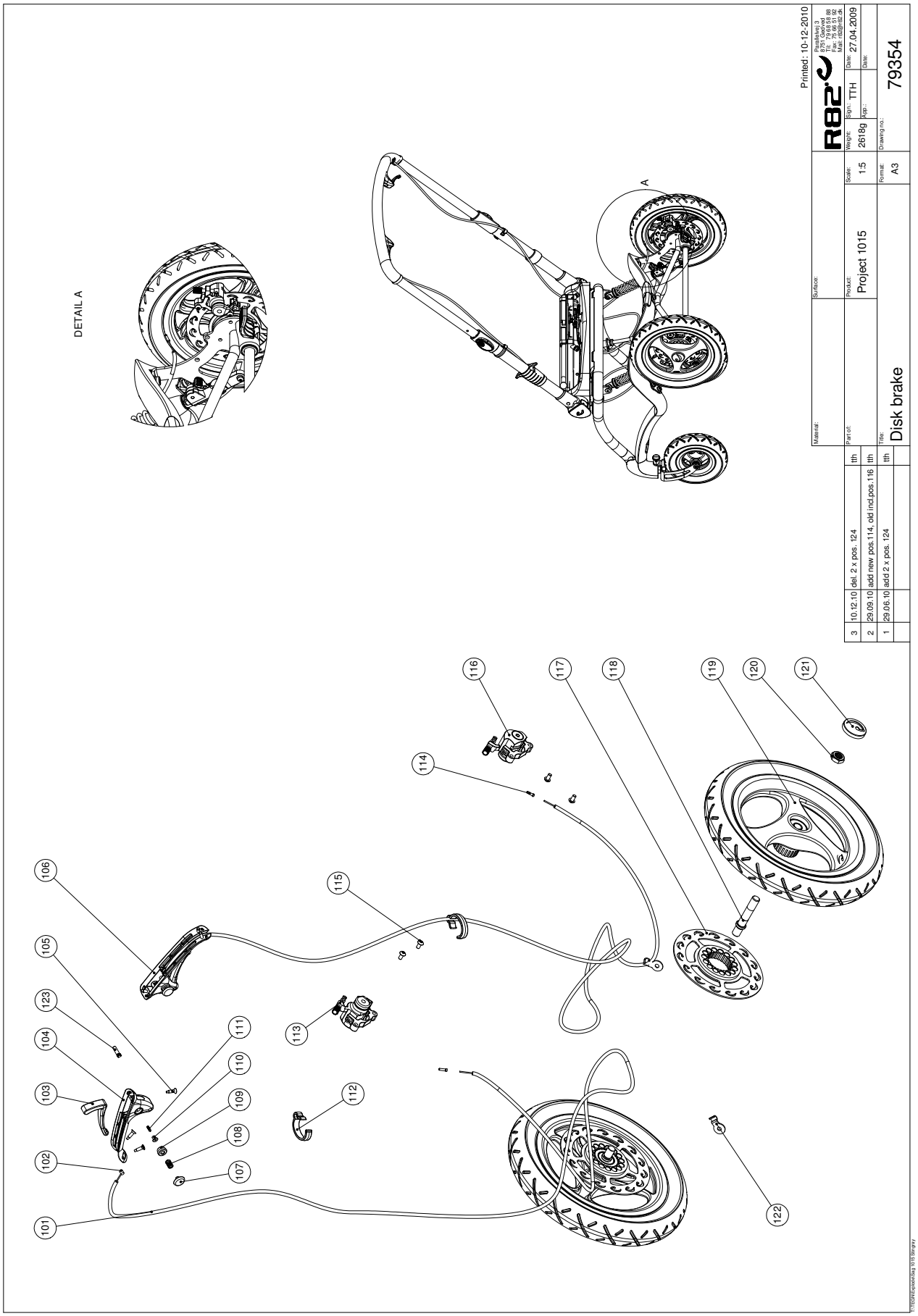
DETAIL A
A
101
102
103
104
105
106
107
108
109
110
111
112
113
114
115
116
117
118
119
120
121
122
123
Printed: 10-12-2010
R82
Parallelvej 3
8751 Gedved
Tlf.: +45 79 68 58 88
Fax: 75 66 51 92
Mail: r82@r82.dk
Material:
Surface:
Part of:
Product:
Project 1015
Scale:
1:5
Weight:
26188g
Sign.: TTH
Date: 27.04.2009
App.:
Date:
Drawing no.:
79354
Format:
A3
Title:
Disk brake
3 10.12.10 del. 2 x pos. 124 tth
2 29.09.10 add new pos.114, old incl.pos.116 tth
1 29.06.10 add 2 x pos. 124 tth

Position	No.	Description	Quantity	Unit of Measure	Ean code
1+87	112397	Carbon frame with Stepcover	STK	1	5707292591012
2	1100500	Spring washer 8mm, stainless	STK	8	5707292140142
3	0609816	Stainless insex screw 8*16	STK	8	5707292138569
4	76027	Rear wheel suspension, black	STK	1	5707292476623
5	6108151	Spring screw 23,55*8,74	STK	2	5707292523617
6	0607999	Stainless Insex screw 12*50	STK	2	5707292482013
7	2985220	Ball bearing for bearing house	STK	4	5707292145420
8	0380184	Spec. Locking house M10*1,28mm	STK	2	5707292366030
9	1100221	Locking ring for 30mm drilling	STK	2	5707292502001
10	76051-1	Front fork new buggy	STK	2	5707292546876
11	0602494	Insex M8*75, stainless	STK	2	5707292502056
12	3004040	Ø190 wheel with air	STK	2	5707292475060
12	3004050	Ø190 wheel massive	STK	2	5707292475077
13	1631120	Stainless lock nut 12mm	STK	2	5707292502049
14	1631080	Stainless lock nut 8mm	STK	2	5707292141453
15	1606002	Nut M12*1-1,25 stainless steel	STK	2	5707292502100
16	76052	Bush for front wheel bearing	STK	2	5707292481542
17	1108000	Washer 8mm	STK	2	5707292140388
18	0602426	Insex M6*25 rustfri, eslok	STK	2	5707292539854
19	2501550	Blind cap 18	STK	2	5707292502254
20	76008	Bush for knee, pom	STK	2	5707292481085
21	0621200	Insex screw 6*12mm	STK	2	5707292138958
22	76042	Axle for springstopper	STK	1	5707292491497
23	111480	Stop pin	STK	1	5707292590206
24	0308714	Stainless spring 1,3*7*23 5½V	STK	1	5707292521040
26	1145050	Lock washer 5mm axle	STK	1	5707292140579
27	1631060	Stainless lock nut 6mm	STK	2	5707292141446
29	1101950	Washer Ø6,1-16*1 mm, FZB	STK	2	5707292140210
30	76018	Bush for knee joint	STK	2	5707292481245
34	1940039	Eco-syn z 4*16 stainless	STK	8	5707292502070
38	2207040	Springstopper l=102/22	STK	1	5707292473127
39	0388006	Screwnipple 5*7,5mm	STK	1	5707292136114
40	76034	Cover for bridge	STK	1	5707292476838
42	1350024	Distance piece 14*15*8,2mm	STK	2	5707292140920
43	76043	Axle for springstopper	STK	1	5707292481450
44	1145060	Locking washer, axle stainless	STK	4	5707292375056
45	1310711	Nylon washer 15x8,4x1,5mm	STK	2	5707292429933
50	76220	Height adjustment	STK	2	5707292491718
51	76231	Handle for tilt in space	STK	1	5707292491855
53	0371854-1	Soft inner cable for Stingray	STK	1	5707292536945
54	5002995	Cable for tilt of seat	STK	1	5707292542724
55	76064	Eccentric for lock	STK	2	5707292481627
56	0530009	Cyl.pin Ø4*50 mm stainless	STK	4	5707292502445
58	76066	Safety lock for handbrace	STK	2	5707292491558
61	0310122	Compression spring 0,9*8u	STK	2	5707292135544
62	76062	Handle of a lock R82	STK	2	5707292481603
63	0641637	Button head M6*60 stainless	STK	2	5707292540317
64	76063	Handle of a lock	STK	2	5707292481610
65	0308711	Stainless spring 2,0*16*20mm	STK	2	5707292502018

67	0530011	Pin Ø3x32 mm.	STK	2	5707292516220
68	76221	Push button for push brace	STK	2	5707292491725
69	0310125	Pressure spring 0,9*8u/Ø12+0,5	STK	2	5707292135575
72	76229	Bearing lining	STK	4	5707292491824
73	76145	Bush for connecting shaft	STK	2	5707292491688
74	76149	Connecting shaft, for brake	STK	1	5707292491794
75	76141	Bottom right, brake	STK	1	5707292491589
76	114300	Pedal right for brake	STK	1	5707292605030
77	76143	House right, for brake	STK	1	5707292491633
78	76148	House left, for brake	STK	1	5707292491787
79	76144	Cover for spring, brake	STK	2	5707292491657
80	0308713	Stainless spring 1,0*6*40mm*17	STK	2	5707292502032
81	114304	Pedal left for brake	STK	1	5707292605047
82	76146	Bottom left, for brake	STK	1	5707292491749
83	1940039	Eco-syn z 4*16 stainless	STK	4	5707292502070
84	3004020	Ø290 wheel air w. quick releas	STK	2	5707292475046
84	3004030	Ø290 wheel pu. w.quick release	STK	2	5707292475053
86	6153550	Knob spring Ø 7.5x5.5 mm	STK	2	5707292513717
90	0609816	Stainless insex screw 8*16	STK	2	5707292138569
91	1105080	Stainless washer 8mm	STK	2	5707292140364
94	1105080	Stainless washer 8mm	STK	2	5707292140364
95	0602008	Stainless insex M5*10	STK	4	5707292542762
96	113790	damper with red hammer	STK	2	5707292601407
97	76069	Distance bush	STK	2	5707292481641
98	1130500	Stainless washer M5, din9021	STK	4	5707292516343
99	0381000	cable adjuster with nut only	STK	1	5707292544018
100	1602800	Steelnut 5mm, FZB	STK	1	5707292141262
101	5102999	Index Casing for stingray	STK	2	5707292542755
102	0371854-1	Soft inner cable for Stingray	STK	2	5707292536945
103	76153	Brake handle for disk brake	STK	2	5707292510273
104	76236	Holder for brake, Right	STK	1	5707292518422
105	1811105	Screw 4.2x16uh, stainless	STK	6	5707292141699
106	76235	Holder for brake, left	STK	1	5707292518415
107	82559	Release button	STK	2	5707292124760
108	0308710	Rf. Spring 0.5*8*10mm*4v	STK	2	5707292135483
109	76159	Bush for locking pin	STK	2	5707292518446
110	76295	Locking pin, disk brake	STK	2	5707292542830
111	0805004	Stopskrue M3*12 rf	STK	2	5707292518354
112	76156	Cable retainer	STK	2	5707292510280
113	3503538	Disk brake right dM60	STK	1	5707292518460
114	0387000	End nipple for outer casing	STK	3	5707292136091
115	0602195	Insex M6*12 stainless	STK	4	5707292404701
116	3503539	Disk brake dM60 left	STK	1	5707292518484
118	76151	Axle for disk brake	STK	2	5707292535351
120	1607005	Locknut 12 mm, A2	STK	2	5707292535368
121	3004065	Cover for 12½" wheel	STK	2	5707292520203
122	76238	Bracket	STK	2	5707292518682
123	0529047	Pin, 5*20mm, stainless 303	STK	2	5707292509840
136	0235073	Cable entry with talkum	STK	1	5707292581617
137	76314	Axle for T-frame	STK	1	5707292538604

R82 A/S
Parallelvej 3
8751 Gedved
Denmark

Tel: +45 79 68 58 88
Fax: +45 75 66 51 92
R82@R82.dk
Web: R82.org

Cvr. Nr.: 16 20 21 85
Swift: JYBA DKKK
Iban No.:DK8072450002003501

138	1606500	Lock nut 6 mm	STK	4	5707292141361
139	1103000	Fazet washer 6mm	STK	4	5707292140289
140	76313	Holder for T-frame	STK	1	5707292538598
141	5079364-01	T-frame mounted black	STK	1	5707292538963
142	0621600	Insex screw counters. 6*16	STK	4	5707292138965
143	76319	Angle reducing ring bush	STK	1	5707292543479
144	2501406	Nut protection, black, f/M8	STK	2	5707292375919
145	76038	Support disc Stingray	STK	2	5707292540324
150	102060	Cabel Holder	STK	1	5707292561336
180	0602007	Stainless insex M5*10	STK	2	5707292542779
117+119	3004037	ø290 Air racing, with disk	STK	2	5707292544803
117+119	3004027	ø290 PUR Racing, with disk	STK	2	5707292544797
Module	5087036	Upperpart Push brace	STK	1	5707292536273
Module	5087037-1	Lower part left, Push brace	STK	1	5707292544032
Module	5087038-1	Lower part right, Push brace	STK	1	5707292544049
Module	5087030-1	Upper frame mounted, black	STK	1	5707292587046

R82 A/S
Parallelvej 3
8751 Gedved
Denmark

Tel: +45 79 68 58 88
Fax: +45 75 66 51 92
R82@R82.dk
Web: R82.org

Cvr. Nr.: 16 20 21 85
Swift: JYBA DKKK
Iban No.:DK8072450002003501

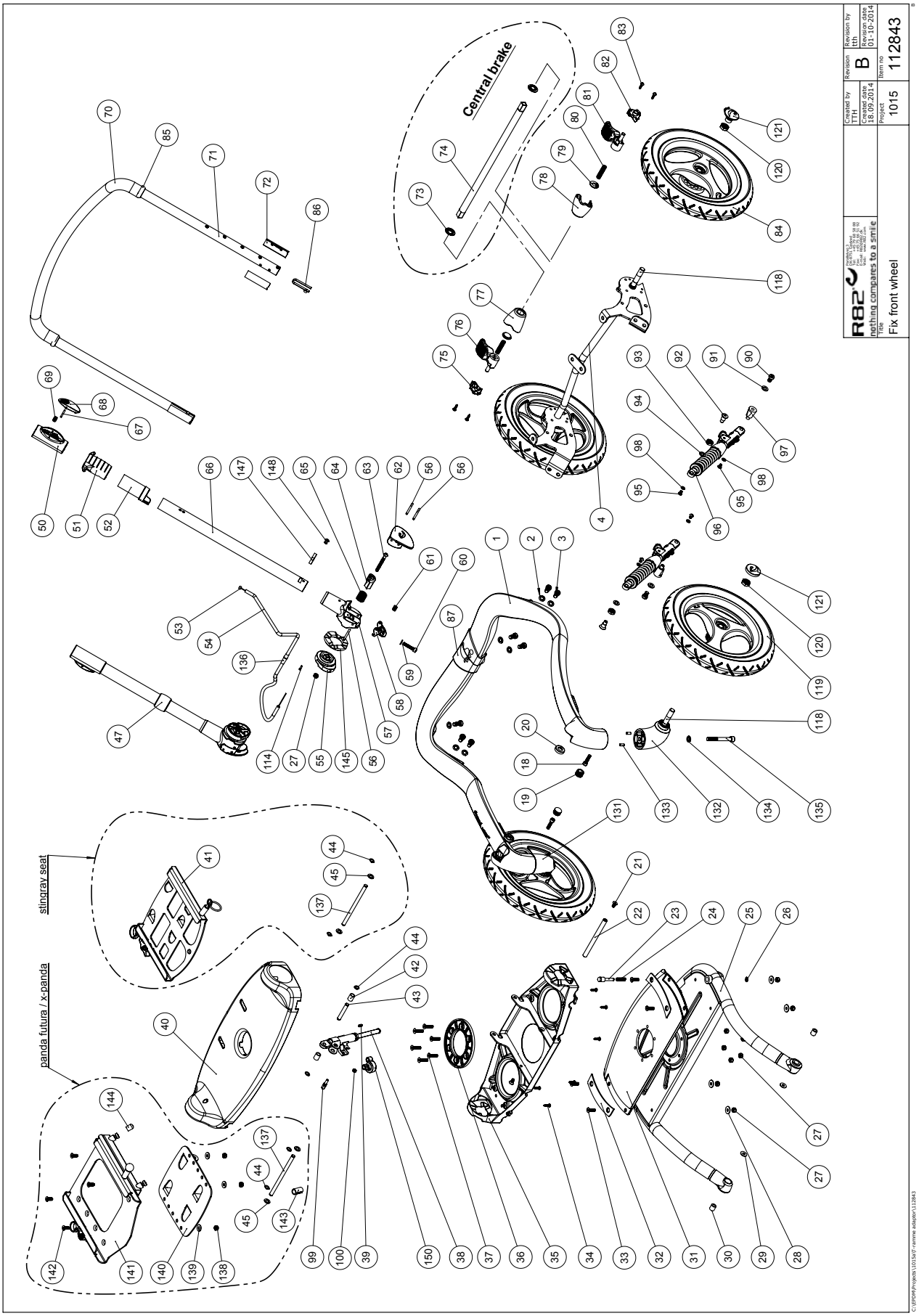
Central brake
stingray seat
panda futura / x-panda
Created by
TTH
Created date
18.09.2014
Revision
B
Revision by
TTH
Revision date
01-10-2014
Project
1015
Item no
112843
nothing compares to a smile
Fix front wheel

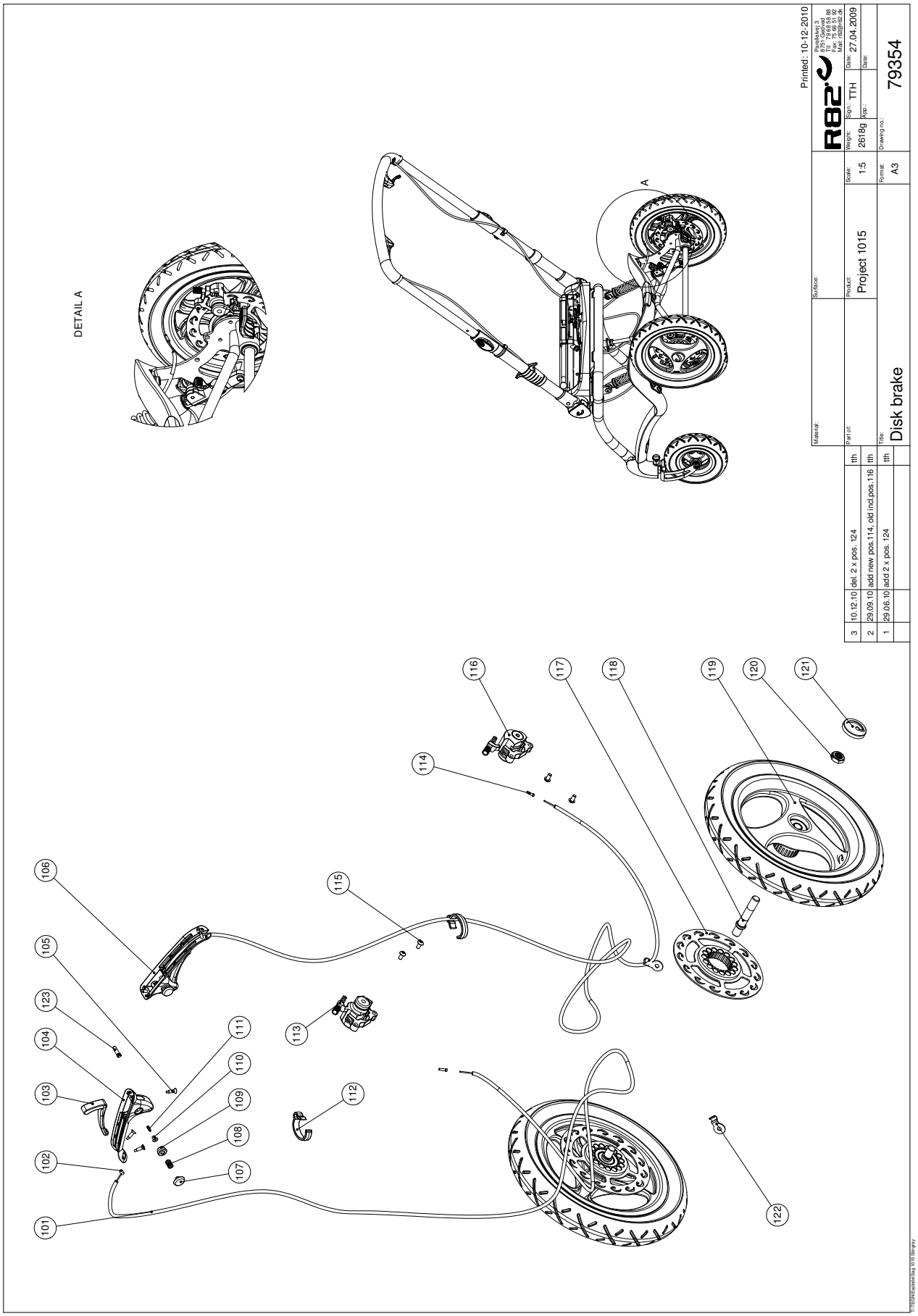
DETAIL A
A
101
102
103
104
105
106
107
108
109
110
111
112
113
114
115
116
117
118
119
120
121
122
123
Printed: 10-12-2010
R82
Parallelvej 3
8751 Gedved
Tlf.: 79 68 58 88
Fax: 75 66 51 92
Mail: r82@r82.dk
Material:
Surface:
Part of:
Product:
Project 1015
Scale:
1:5
Weight:
26188g
Sign.: TTH
Date: 27.04.2009
App.:
Date:
Drawing no.:
79354
Format:
A3
Title:
Disk brake
3 10.12.10 del. 2 x pos. 124 tth
2 29.09.10 add new pos.114, old incl.pos.116 tth
1 29.06.10 add 2 x pos. 124 tth

Position	No.	Description	Quantity	Unit of Measure	Ean code
1+87	112397	Carbon frame with Stepcover	PCS	1	5707292591012
2	1100500	Spring washer 8mm, stainless	PCS	8	5707292140142
3	0609816	Stainless insex screw 8*16	PCS	8	5707292138569
4	76027	Rear wheel suspension, black	PCS	1	5707292476623
18	0602426	Insex M6*25 rustfri, eslok	PCS	2	5707292539854
19	2501550	Blind cap 18	PCS	2	5707292502254
20	76008	Bush for knee, pom	PCS	2	5707292481085
21	0621200	Insex screw 6*12mm	PCS	2	5707292138958
22	76042	Axle for springstopper	PCS	1	5707292491497
23	111480	Stop pin	PCS	1	5707292590206
24	0308714	Stainless spring 1,3*7*23 5½V	PCS	1	5707292521040
26	1145050	Lock washer 5mm axle	PCS	1	5707292140579
27	1631060	Stainless lock nut 6mm	PCS	2	5707292141446
29	1101950	Washer Ø6,1-16*1 mm, FZB	PCS	2	5707292140210
30	76018	Bush for knee joint	PCS	2	5707292481245
34	1940039	Eco-syn z 4*16 stainless	PCS	8	5707292502070
38	2207040	Springstopper l=102/22	PCS	1	5707292473127
39	0388006	Screwnipple 5*7,5mm	PCS	1	5707292136114
40	76034	Cover for bridge	PCS	1	5707292476838
41	110176	T-frame for Stingray	PCS	1	5707292598141
42	1350024	Distance piece 14*15*8,2mm	PCS	2	5707292140920
43	76043	Axle for springstopper	PCS	1	5707292481450
44	1145060	Locking washer, axle stainless	PCS	4	5707292375056
45	1310711	Nylon washer 15x8,4x1,5mm	PCS	2	5707292429933
50	76220	Height adjustment	PCS	2	5707292491718
51	76231	Handle for tilt in space	PCS	1	5707292491855
53	0371854-1	Soft inner cable for Stingray	PCS	1	5707292536945
54	5002995	Cable for tilt of seat	PCS	1	5707292542724
55	76064	Eccentric for lock	PCS	2	5707292481627
56	0530009	Cyl.pin Ø4*50 mm stainless	PCS	4	5707292502445
58	76066	Safety lock for handbrace	PCS	2	5707292491558
61	0310122	Compression spring 0,9*8u	PCS	2	5707292135544
62	76062	Handle of a lock R82	PCS	2	5707292481603
63	0641637	Button head M6*60 stainless	PCS	2	5707292540317
64	76063	Handle of a lock	PCS	2	5707292481610
65	0308711	Stainless spring 2,0*16*20mm	PCS	2	5707292502018
67	0530011	Pin Ø3x32 mm.	PCS	2	5707292516220
68	76221	Push button for push brace	PCS	2	5707292491725
69	0310125	Pressure spring 0,9*8u/Ø12+0,5	PCS	2	5707292135575
72	76229	Bearing lining	PCS	4	5707292491824
73	76145	Bush for connecting shaft	PCS	2	5707292491688
74	76149	Connecting shaft, for brake	PCS	1	5707292491794
75	76141	Bottom right, brake	PCS	1	5707292491589
76	114300	Pedal right for brake	PCS	1	5707292605030
77	76143	House right, for brake	PCS	1	5707292491633
78	76148	House left, for brake	PCS	1	5707292491787
79	76144	Cover for spring, brake	PCS	2	5707292491657
80	0308713	Stainless spring 1,0*6*40mm*17	PCS	2	5707292502032
81	114304	Pedal left for brake	PCS	1	5707292605047

82	76146	Bottom left, for brake	PCS	1	5707292491749
83	1940039	Eco-syn z 4*16 stainless	PCS	4	5707292502070
84	3004026	Ø290 wheel air, fixed axle	PCS	2	5707292525628
84	3004034	Ø290 solid racing, fixed axle	PCS	2	5707292525635
86	6153550	Knob spring Ø 7.5x5.5 mm	PCS	2	5707292513717
90	0609816	Stainless insex screw 8*16	PCS	2	5707292138569
91	1105080	Stainless washer 8mm	PCS	2	5707292140364
94	1105080	Stainless washer 8mm	PCS	2	5707292140364
95	0602008	Stainless insex M5*10	PCS	4	5707292542762
96	113790	damper with red hammer	PCS	2	5707292601407
97	76069	Distance bush	PCS	2	5707292481641
98	1130500	Stainless washer M5, din9021	PCS	4	5707292516343
99	0381000	cable adjuster with nut only	PCS	1	5707292544018
100	1602800	Steelnut 5mm, FZB	PCS	1	5707292141262
101	5102999	Index Casing for stingray	PCS	2	5707292542755
105	1811105	Screw 4.2x16uh, stainless	PCS	6	5707292141699
112	76156	Cable retainer	PCS	2	5707292510280
113	3503538	Disk brake right dM60	PCS	1	5707292518460
114	0387000	End nipple for outer casing	PCS	3	5707292136091
115	0602195	Insex M6*12 stainless	PCS	4	5707292404701
116	3503539	Disk brake dM60 left	PCS	1	5707292518484
118	76151	Axle for disk brake	PCS	4	5707292535351
119	3004035	Ø290 air racing, fixed axle	PCS	2	5707292506429
119	3004025	Ø290 wheel pu, fixed axle	PCS	2	5707292506412
120	1607005	Locknut 12 mm, A2	PCS	4	5707292535368
121	3004065	Cover for 12½" wheel	PCS	4	5707292520203
122	76238	Bracket	PCS	2	5707292518682
131	76010	Frontwheel bracket, right	PCS	1	5707292476821
132	76009	Frontwheel bracket, left	PCS	1	5707292476814
133	0529048	Pin Ø5,0x14 mm.	PCS	4	5707292524478
134	1100500	Spring washer 8mm, stainless	PCS	2	5707292140142
135	0603700	Insex screw 8*70	PCS	2	5707292138293
136	0235073	Cable entry with talkum	PCS	1	5707292581617
137	76314	Axle for T-frame	PCS	1	5707292538604
145	76038	Support disc Stingray	PCS	2	5707292540324
150	102060	Cabel Holder	PCS	1	5707292561336
180	0602007	Stainless insex M5*10	PCS	2	5707292542779
117+119	3004037	ø290 Air racing, with disk	PCS	2	5707292544803
117+119	3004027	ø290 PUR Racing, with disk	PCS	2	5707292544797
117-119	3004027	ø290 PUR Racing, with disk	PCS	2	5707292544797
Module	5087036	Upperpart Push brace	PCS	1	5707292536273
Module	5087037-1	Lower part left, Push brace	PCS	1	5707292544032
Module	5087038-1	Lower part right, Push brace	PCS	1	5707292544049
Module	5087030-1	Upper frame mounted, black	PCS	1	5707292587046
Module	5076235	Holder for brake, left mounted	PCS	1	5707292525413
Module	5076236	Holder for brake,right mounted	PCS	1	5707292525420

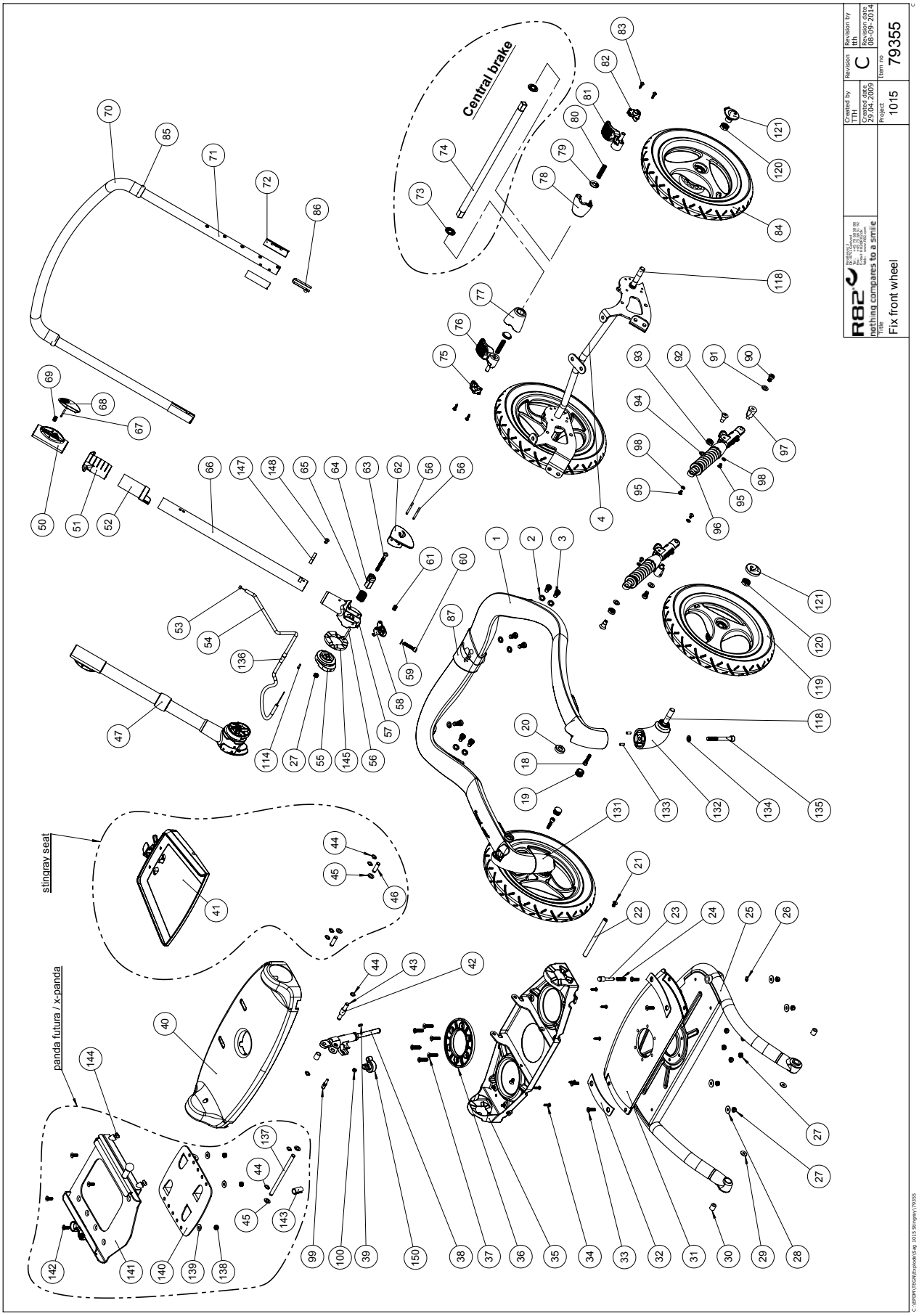
Central brake
stingray seat
panda futura / x-panda
Created by
TTH
Created date
29.04.2009
Revision
C
Revision by
tth
Revision date
08-09-2014
Project
1015
Item no
79355
R82
nothing compares to a smile
Fix front wheel

Position	No.	Description	Quantity	Unit of Measure	Ean code
1+87	112397	Carbon frame with Stepcover	PCS	1	5707292591012
2	1100500	Spring washer 8mm, stainless	PCS	8	5707292140142
3	0609816	Stainless insex screw 8*16	PCS	8	5707292138569
4	76027	Rear wheel suspension, black	PCS	1	5707292476623
18	0602426	Insex M6*25 rustfri, eslok	PCS	2	5707292539854
19	2501550	Blind cap 18	PCS	2	5707292502254
20	76008	Bush for knee, pom	PCS	2	5707292481085
21	0621200	Insex screw 6*12mm	PCS	2	5707292138958
22	76042	Axle for springstopper	PCS	1	5707292491497
23	111480	Stop pin	PCS	1	5707292590206
24	0308714	Stainless spring 1,3*7*23 5½V	PCS	1	5707292521040
26	1145050	Lock washer 5mm axle	PCS	1	5707292140579
27	1631060	Stainless lock nut 6mm	PCS	2	5707292141446
29	1101950	Washer Ø6,1-16*1 mm, FZB	PCS	2	5707292140210
30	76018	Bush for knee joint	PCS	2	5707292481245
34	1940039	Eco-syn z 4*16 stainless	PCS	8	5707292502070
38	2207040	Springstopper l=102/22	PCS	1	5707292473127
39	0388006	Screwnipple 5*7,5mm	PCS	1	5707292136114
40	76034	Cover for bridge	PCS	1	5707292476838
42	1350024	Distance piece 14*15*8,2mm	PCS	2	5707292140920
43	76043	Axle for springstopper	PCS	1	5707292481450
44	1145060	Locking washer, axle stainless	PCS	4	5707292375056
45	1310711	Nylon washer 15x8,4x1,5mm	PCS	2	5707292429933
50	76220	Height adjustment	PCS	2	5707292491718
51	76231	Handle for tilt in space	PCS	1	5707292491855
53	0371854-1	Soft inner cable for Stingray	PCS	1	5707292536945
54	5002995	Cable for tilt of seat	PCS	1	5707292542724
55	76064	Eccentric for lock	PCS	2	5707292481627
56	0530009	Cyl.pin Ø4*50 mm stainless	PCS	4	5707292502445
58	76066	Safety lock for handbrace	PCS	2	5707292491558
61	0310122	Compression spring 0,9*8u	PCS	2	5707292135544
62	76062	Handle of a lock R82	PCS	2	5707292481603
63	0641637	Button head M6*60 stainless	PCS	2	5707292540317
64	76063	Handle of a lock	PCS	2	5707292481610
65	0308711	Stainless spring 2,0*16*20mm	PCS	2	5707292502018
67	0530011	Pin Ø3x32 mm.	PCS	2	5707292516220
68	76221	Push button for push brace	PCS	2	5707292491725
69	0310125	Pressure spring 0,9*8u/Ø12+0,5	PCS	2	5707292135575
72	76229	Bearing lining	PCS	4	5707292491824
73	76145	Bush for connecting shaft	PCS	2	5707292491688
74	76149	Connecting shaft, for brake	PCS	1	5707292491794
75	76141	Bottom right, brake	PCS	1	5707292491589
76	114300	Pedal right for brake	PCS	1	5707292605030
77	76143	House right, for brake	PCS	1	5707292491633
78	76148	House left, for brake	PCS	1	5707292491787
79	76144	Cover for spring, brake	PCS	2	5707292491657
80	0308713	Stainless spring 1,0*6*40mm*17	PCS	2	5707292502032
81	114304	Pedal left for brake	PCS	1	5707292605047
82	76146	Bottom left, for brake	PCS	1	5707292491749

R82 A/S
Parallelvej 3
8751 Gedved
Denmark

Tel: +45 79 68 58 88
Fax: +45 75 66 51 92
R82@R82.dk
Web: R82.org

Cvr. Nr.: 16 20 21 85
Swift: JYBA DKKK
Iban No.:DK8072450002003501

83	1940039	Eco-syn z 4*16 stainless	PCS	4	5707292502070
84	3004034	Ø290 solid racing, fixed axle	PCS	2	5707292525635
86	6153550	Knob spring Ø 7.5x5.5 mm	PCS	2	5707292513717
90	0609816	Stainless insex screw 8*16	PCS	2	5707292138569
91	1105080	Stainless washer 8mm	PCS	2	5707292140364
94	1105080	Stainless washer 8mm	PCS	2	5707292140364
95	0602008	Stainless insex M5*10	PCS	4	5707292542762
96	113790	damper with red hammer	PCS	2	5707292601407
97	76069	Distance bush	PCS	2	5707292481641
98	1130500	Stainless washer M5, din9021	PCS	4	5707292516343
99	0381000	cable adjuster with nut only	PCS	1	5707292544018
100	1602800	Steelnut 5mm, FZB	PCS	1	5707292141262
114	0387000	End nipple for outer casing	PCS	1	5707292136091
118	76151	Axle for disk brake	PCS	4	5707292535351
119	3004025	Ø290 wheel pu, fixed axle	PCS	2	5707292506412
120	1607005	Locknut 12 mm, A2	PCS	4	5707292535368
121	3004065	Cover for 12½" wheel	PCS	4	5707292520203
131	76010	Frontwheel bracket, right	PCS	1	5707292476821
132	76009	Frontwheel bracket, left	PCS	1	5707292476814
133	0529048	Pin Ø5,0x14 mm.	PCS	4	5707292524478
134	1100500	Spring washer 8mm, stainless	PCS	2	5707292140142
135	0603700	Insex screw 8*70	PCS	2	5707292138293
136	0235073	Cable entry with talkum	PCS	1	5707292581617
137	76314	Axle for T-frame	PCS	1	5707292538604
138	1606500	Lock nut 6 mm	PCS	4	5707292141361
139	1103000	Fazet washer 6mm	PCS	4	5707292140289
140	76313	Holder for T-frame	PCS	1	5707292538598
141	5079364-01	T-frame mounted black	PCS	1	5707292538963
142	0621600	Insex screw counters. 6*16	PCS	4	5707292138965
143	76319	Angle reducing ring bush	PCS	1	5707292543479
144	2501406	Nut protection, black, f/M8	PCS	2	5707292375919
145	76038	Support disc Stingray	PCS	2	5707292540324
150	102060	Cabel Holder	PCS	1	5707292561336
Module	5087036	Upperpart Push brace	PCS	1	5707292536273
Module	5087037-1	Lower part left, Push brace	PCS	1	5707292544032
Module	5087038-1	Lower part right, Push brace	PCS	1	5707292544049
Module	5087030-1	Upper frame mounted, black	PCS	1	5707292587046

R82 A/S
Parallelvej 3
8751 Gedved
Denmark

Tel: +45 79 68 58 88
Fax: +45 75 66 51 92
R82@R82.dk
Web: R82.org

Cvr. Nr.: 16 20 21 85
Swift: JYBA DKKK
Iban No.:DK8072450002003501

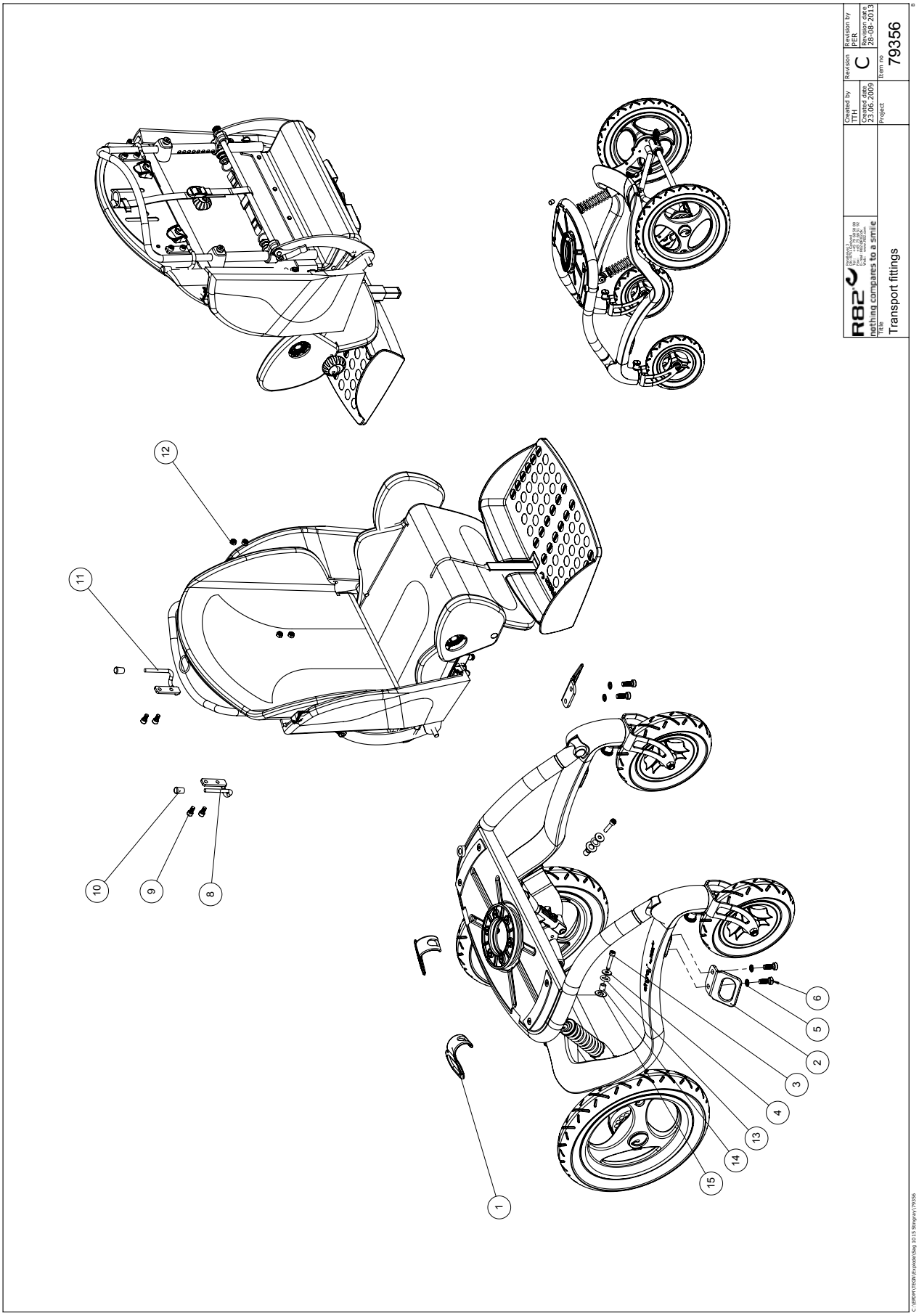
1
2
3
4
5
6
8
9
10
11
12
13
14
15
R82
nothing compares to a smile
Created by
TTH
Revision
C
Revision by
PEB
Created date
23.06.2009
Revision date
28-08-2013
Project
Item no
79356
Title
Transport fittings

Position	No.	Description	Quantity	Unit of Measure	Ean code
1	109016	Clamping bracket, rear part	PCS	2	5707292574893
2	76131	Clamping bracket, front part	PCS	2	5707292483126
3	0602426	Insex M6*25 rustfri, eslok	PCS	2	5707292539854
4	1102001	Washer 6*20*1,5 mm, RF	PCS	2	5707292565754
5	1100500	Spring washer 8mm, stainless	PCS	4	5707292140142
6	0609820	Stainless insex screw 8*20	PCS	4	5707292138576
8	76305	Bracket for trap, right	PCS	1	5707292514301
9	0602195	Insex M6*12 stainless	PCS	4	5707292404701
10	3501852	Black pvc cap 5,0*24mm	PCS	2	5707292569653
11	76304	Bracket for trap, left	PCS	1	5707292514295
12	1631060	Stainless lock nut 6mm	PCS	4	5707292141446
13	0104550	O-ringe 11,0 X 3,5 NBR70	PCS	2	5707292564139
14	81219	Bush for headrestmounting	PCS	2	5707292434265
15	1354520	Spacer black 5*20*10,5mm	PCS	2	5707292140982

R82 A/S
Parallelvej 3
8751 Gedved
Denmark

Tel: +45 79 68 58 88
Fax: +45 75 66 51 92
R82@R82.dk
Web: R82.org

Cvr. Nr.: 16 20 21 85
Swift: JYBA DKKK
Iban No.:DK8072450002003501

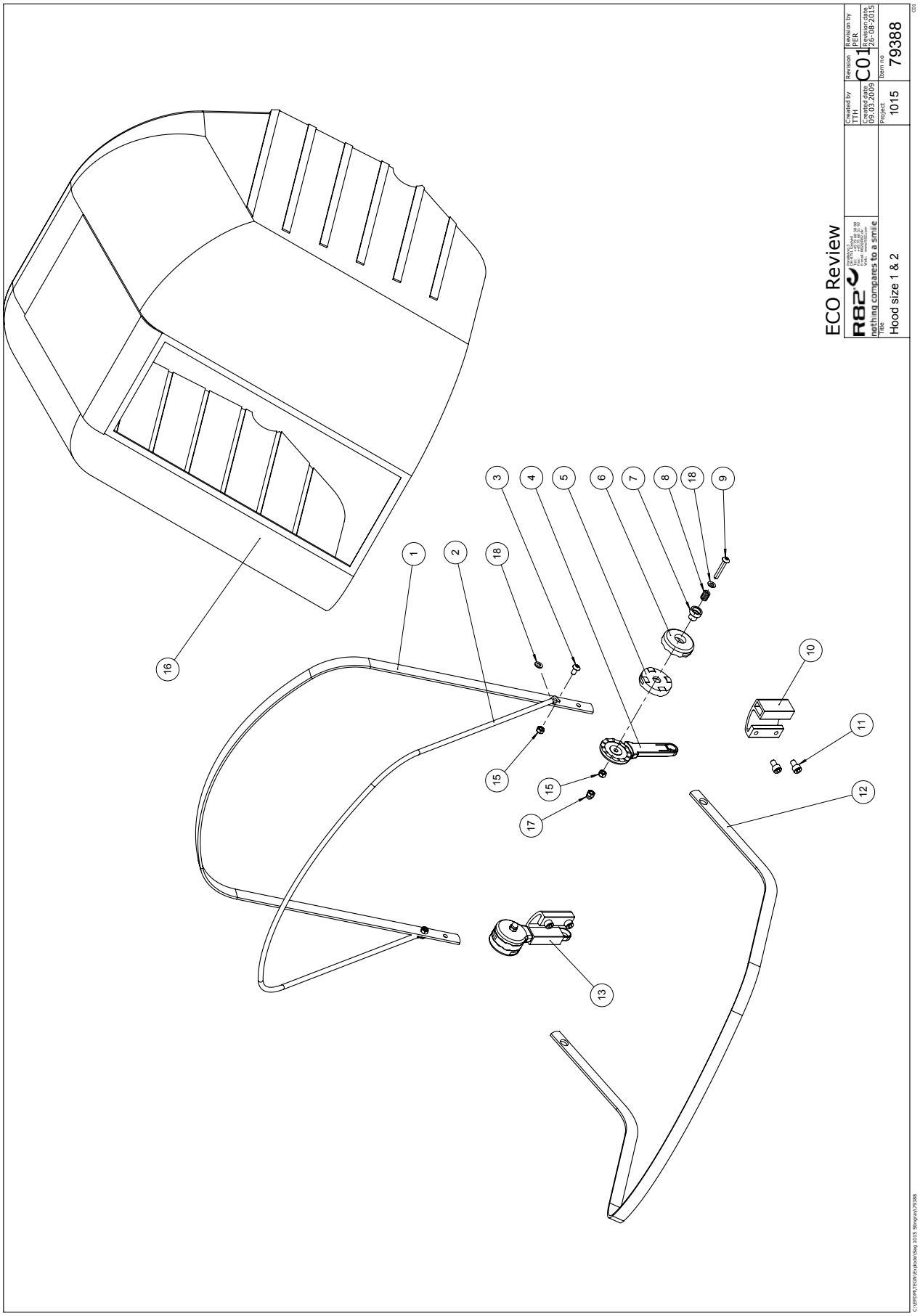
ECO Review
R82
nothing compares to a smile
Created by
TTH
Created date
09.03.2009
Revision
C01
Revision by
PER
Revision date
26-08-2015
Title
Hood size 1 & 2
Project
1015
Item no
79388
1
2
3
4
5
6
7
8
9
10
11
12
13
15
15
16
17
18
18

Position	No.	Description	Quantity	Unit of Measure	Ean code
1	76289	brace 3 size 1	PCS	1	5707292505255
1	76293	brace 3 size 2	PCS	1	5707292505286
2	76288	brace 2 size 1	PCS	1	5707292505231
2	76292	brace 2 size 2	PCS	1	5707292505279
3	0658012	Button head M5*12 FZB	PCS	2	5707292139382
4	100893	Tooth disk ø40, inside	PCS	2	5707292554574
5	100891	Tooth disk ø40, middle	PCS	2	5707292554550
6	100892	Tooth disk ø40, outside	PCS	2	5707292554567
7	100890	Distance bush Stingray	PCS	2	5707292555564
8	0302011	Spring i5,2*17*1,6*5v rf	PCS	2	5707292555489
9	0640930	Button head M5*30 FZB	PCS	2	5707292139221
10	100836	Holder for hood	PCS	1	5707292553072
11	0609810	Insex screw ch M6*10 stainless	PCS	4	5707292440594
12	76287	brace 1 size 1	PCS	1	5707292505248
12	76291	brace 1 size 2	PCS	1	5707292505262
13	100836	Holder for hood	PCS	1	5707292553072
15	1631050	Prevailing torque lock nut m5	PCS	4	5707292510662
16	8740110-1	Hood cover str. 1, sort	PCS	1	5707292616241
16	8740120-1	Hood cover str. 2, sort	PCS	1	5707292616258
17	1781050	Top nut M5 / lock rf	PCS	2	5707292530639
18	1102902	Washer 5mm, A2	PCS	4	5707292411280

R82 A/S
Parallelvej 3
8751 Gedved
Denmark

Tel: +45 79 68 58 88
Fax: +45 75 66 51 92
R82@R82.dk
Web: R82.org

Cvr. Nr.: 16 20 21 85
Swift: JYBA DKKK
Iban No.:DK8072450002003501

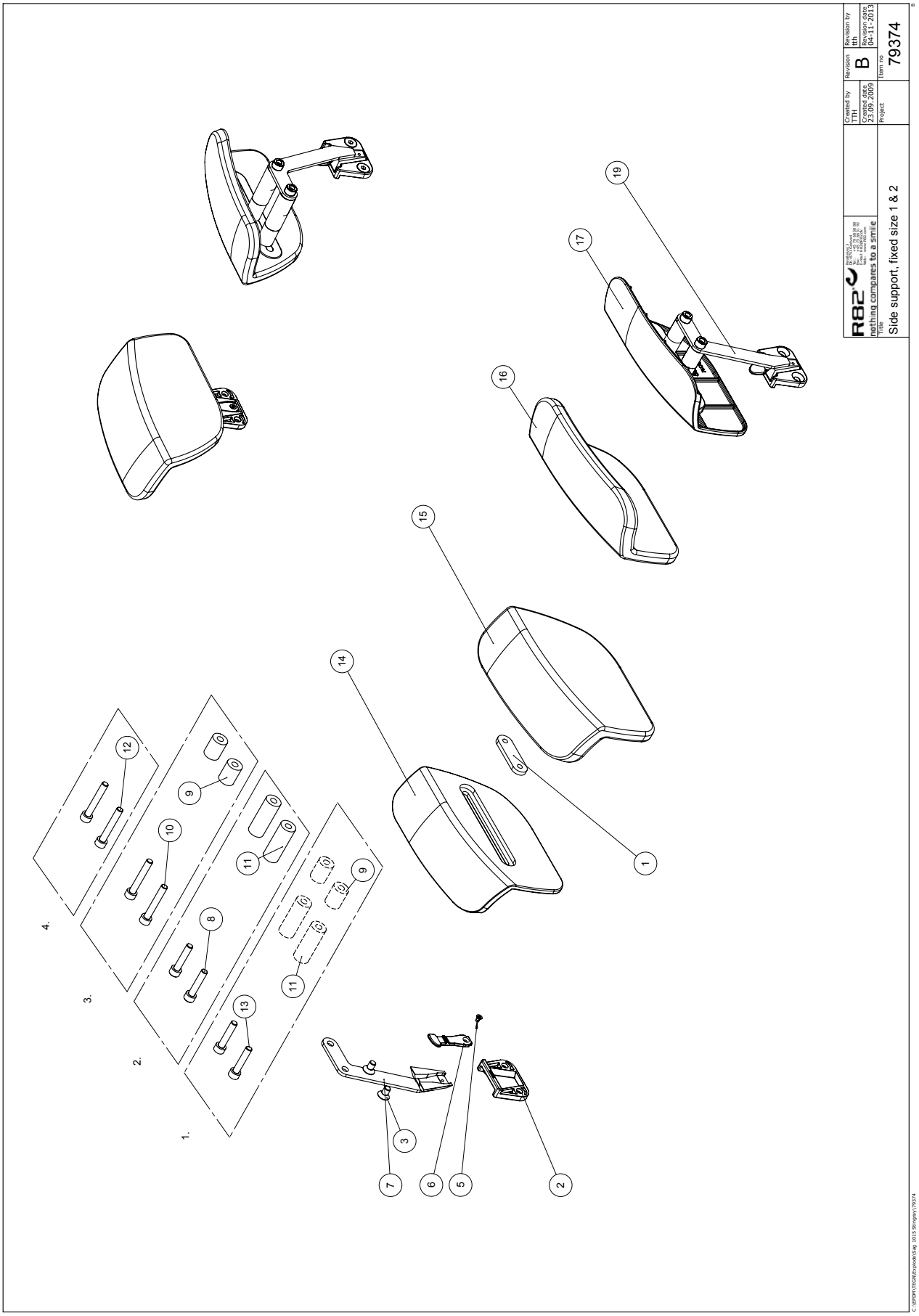
R82
nothing compares to a smile
Created by
TTH
Revision
B
Revision by
tth
Created date
23.09.2009
Revision date
04-11-2013
Project
Item no
79374
Title
Side support, fixed size 1 & 2
1.
2.
3.
4.

Position	No.	Description	Quantity	Unit of Measure	Ean code
1	75840	Back Plate for hip support	PIECES	2	5707292503329
2	76175	Holder for dovetail	PIECES	2	5707292503336
3	0609720	Stainless insex 6*10	PIECES	4	5707292446039
5	1811102	M3x6 UH	PIECES	2	5707292510648
6	76176	Safty lock	PIECES	2	5707292503367
7*	76265	Bracket with dovetail size 2 R	PIECES	1	5707292516305
	76263	Bracket with dovetail size 1 R	PIECES	1	5707292516282
8	0602455	Insex M6*50 stainless	PIECES	4	5707292407283
9	1310677	Distance piece black Ø6,3*Ø15*20MM	PIECES	4	5707292516329
10	0602430	Insex M6*30 stainless	PIECES	4	5707292407276
11	1310678	Distance piece black Ø6,3*Ø15*40MM	PIECES	4	5707292516336
12	0609810	Stainless insex CH M6*10	PIECES	4	5707292440594
13	0602470	Insex M6*70, stainless	PIECES	4	5707292407870
14*	76180	Side plate, size 2 Right	PIECES	1	5707292491695
	76178	Side plate, size 1 Right	PIECES	1	5707292491664
15+16*	8730311	Cover for hip support sz.1, blue	SET	1	5707292514158
	8730312	Cover for hip support sz.1, red	SET	1	5707292514165
	8730313	Cover for hip support sz.1, green	SET	1	5707292514172
	8730321	Cover for hip support sz.2, blue	SET	1	5707292514189
	8730322	Cover for hip support sz.2, red	SET	1	5707292514196
	8730323	Cover for hip support sz.2, green	SET	1	5707292514202
17*	76179	Side plate, size 2 Left	PIECES	1	5707292491671
	76177	Side plate, size 1 Left	PIECES	1	5707292491640
19*	76264	Bracket with dovetail size 2 L	PIECES	1	5707292516299
	76262	Bracket for hood 2	PIECES	1	5707292488411

R82 A/S
Parallelvej 3
8751 Gedved
Denmark

Tel: +45 79 68 58 88
Fax: +45 75 66 51 92
R82@R82.dk
Web: R82.org

Cvr. Nr.: 16 20 21 85
Swift: JYBA DKKK
Iban No.:DK8072450002003501

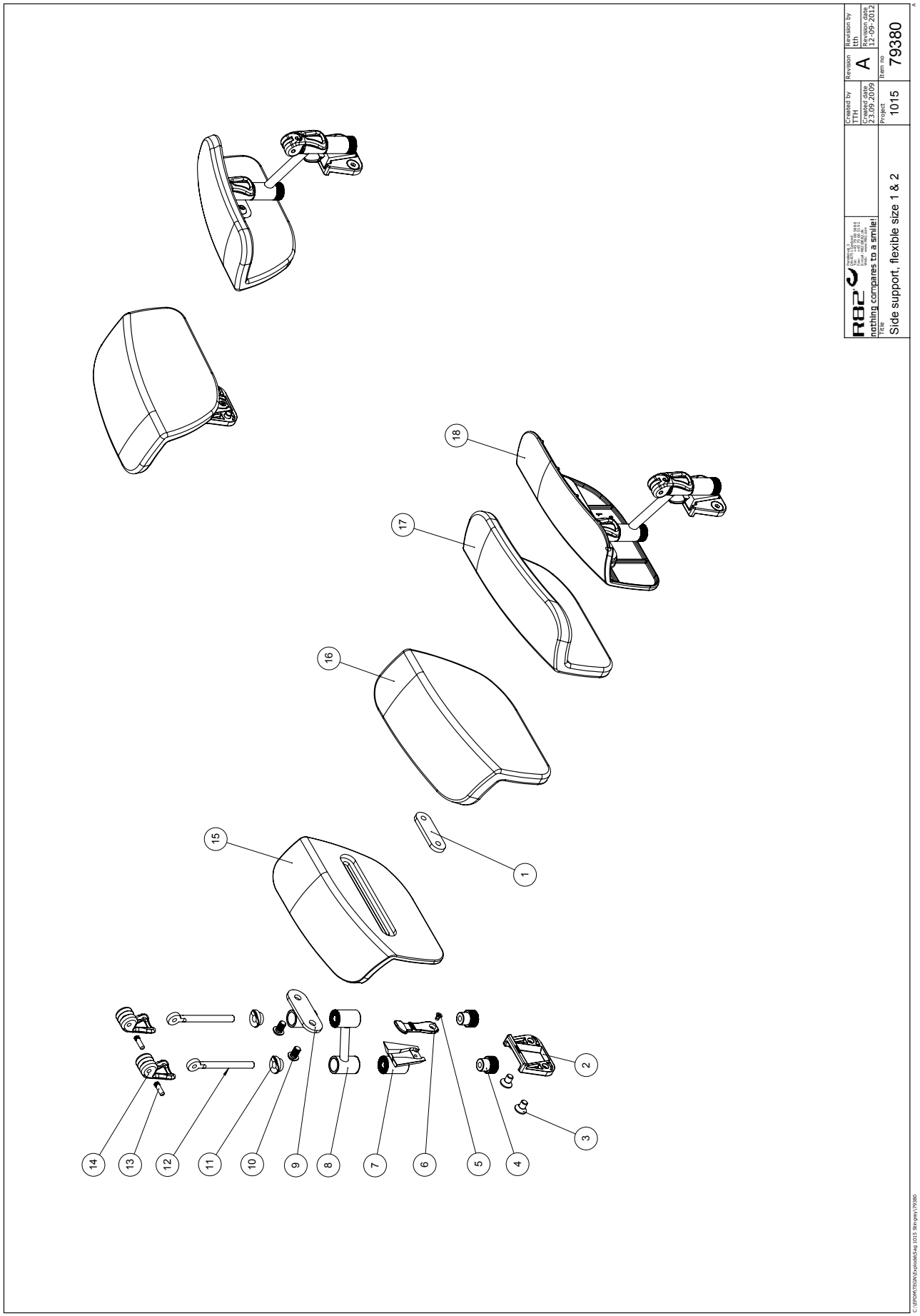
R82
nothing compares to a smile!
Created by
TTH
Created date
23.09.2009
Revision
A
Revision by
tth
Revision date
12-09-2012
Title
Side support, flexible size 1 & 2
Project
1015
Item no
79380
1
2
3
4
5
6
7
8
9
10
11
12
13
14
15
16
17
18

Position	No.	Description	Quantity	Unit of Measure	Ean code
1	75840	Back plate for hip support	PIECES	2	5707292503329
2	76175	Holder for dovetail	PIECES	2	5707292503336
3	0609720	Stainless insex 6*10	PIECES	4	5707292446039
4	76183	Handle M6 with bush	PIECES	4	5707292505859
5	1811102	M3x6 UH A2	PIECES	2	5707292510648
6	76176	Safety lock	PIECES	2	5707292503367
7	76173	Toothdisc bracket w. Dovetail	PIECES	2	5707292503947
8	76171	Cranck for side support	PIECES	2	5707292491602
9	75838	Toothdisc bracket f. Hip supp.	PIECES	2	5707292503916
10	0659005	Insex button head M6*10,stainl	PIECES	4	5707292423740
11	76189	Saddle for excentrik hande	PIECES	4	5707292503374
12	76201	Stay with M6	PIECES	4	5707292503992
13	0529045	Pin 4*15mm, stainless 303	PIECES	4	5707292509833
14	76188	Handle eccentric	PIECES	4	5707292503350
15*	76177	Side plate, size 1 left	PIECES	1	5707292491640
	76179	Side plate, size 2 left	PIECES	1	5707292491671
16+17*	8730311	Stingray hipsupport cover 1	SET	1	5707292514158
	8730321	Stingray hip support cover 2	SET	1	5707292514189
18*	76178	Side plate, size 1 right	PIECES	1	5707292491664
	76180	Side plate, size 2 right	PIECES	1	5707292491695

R82 A/S
Parallelvej 3
8751 Gedved
Denmark

Tel: +45 79 68 58 88
Fax: +45 75 66 51 92
R82@R82.dk
Web: R82.org

Cvr. Nr.: 16 20 21 85
Swift: JYBA DKKK
Iban No.:DK8072450002003501

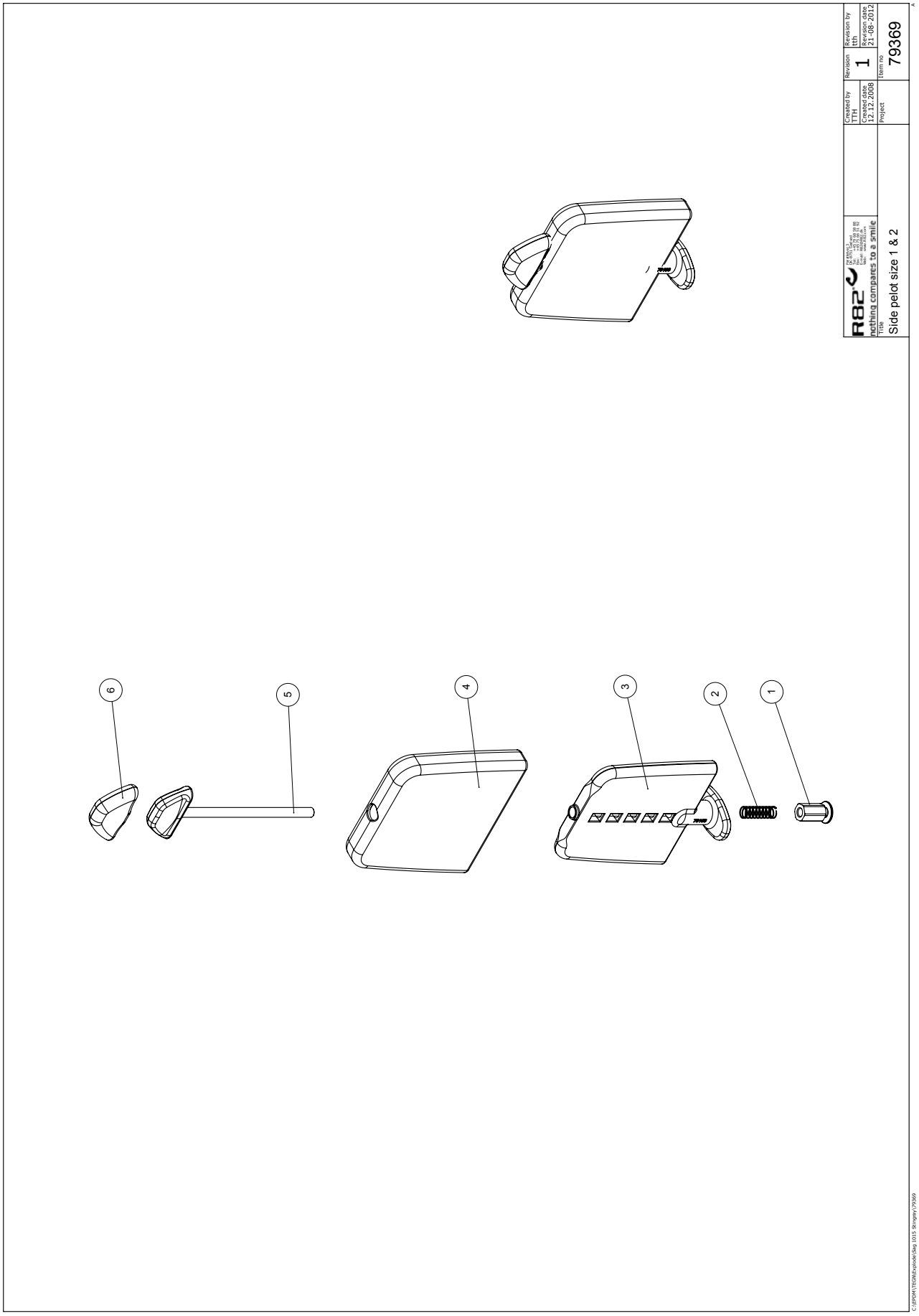
6
5
4
3
2
1
R82
nothing compares to a smile
Created by
TTH
Revision
1
Revision by
tth
Created date
12.12.2008
Revision date
21-08-2012
Project
Item no
79369
Title
Side pelot size 1 & 2

Position	No.	Description	Quantity	Unit of Measure	Ean code
1	76164	Hex nut for pelot	PIECES	1	5707292503497
2	0310100	Pressurespring 0,9*8*23*10,5v	PIECES	1	5707292135513
3*	5700580	Side support str.1 Sting	PIECES	2	5707292520982
	5700581	Side support str.2 Sting	PIECES	2	5707292520999
4*	5027240	Cover for side support size 1	PIECES	2	5707292520968
	5027241	Cover for side support size 2	PIECES	2	5707292521002
5*	76163	Knop for pelot, size 1	PIECES	1	5707292491596
	76168	Knop for pelot, size 2	PIECES	1	5707292503534
6	8720360	Covers for knobs on side supp.	SET	1	5707292555571

R82 A/S
Parallelvej 3
8751 Gedved
Denmark

Tel: +45 79 68 58 88
Fax: +45 75 66 51 92
R82@R82.dk
Web: R82.org

Cvr. Nr.: 16 20 21 85
Swift: JYBA DKKK
Iban No.:DK8072450002003501

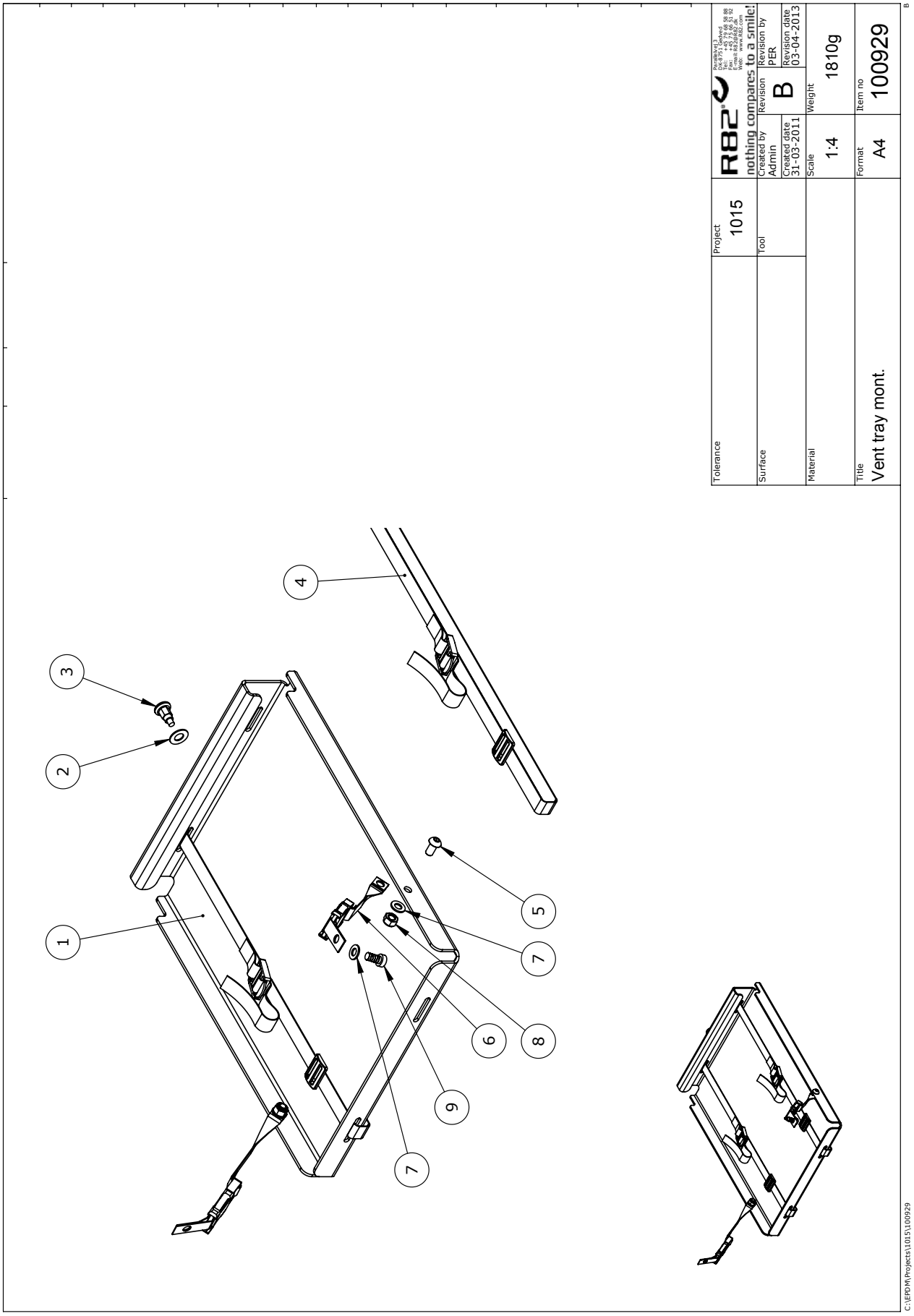
Tolerance
Project
1015
Surface
Tool
Material
Title
Vent tray mont.
R82
nothing compares to a smile!
Parallelvej 3
DK-8751 Gedved
Tel.: +45 79 68 58 88
Fax: +45 75 66 51 92
E-mail: R82@R82.dk
Web: www.R82.com
Created by
Admin
Revision
B
Revision by
PER
Created date
31-03-2011
Revision date
03-04-2013
Scale
1:4
Weight
1810g
Format
A4
Item no
100929
1
2
3
4
5
6
7
8
9
7
C:\EPD\M\Projects\1015\100929

Position	No.	Description	Quantity	Unit of Measure	Ean code
1	76290	Vent tray	PCS	1	5707292547354
2	1102500	Planning washer 10 mm	PCS	1	5707292140234
3	0380182	Locking house, complete M10*1	PCS	1	5707292357953
4	5540545	Strap for oxygen bottle	PCS	2	5707292480798
5	0661500	Button head screw 8*16 stainl.	PCS	2	5707292139559
6	5540541	Strap for vent tray	PCS	2	5707292552686
7	1105080	Stainless washer 8mm	PCS	4	5707292140364
8	1631080	Stainless lock nut 8mm	PCS	2	5707292141453
9	0609820	Stainless insex screw 8*20	PCS	2	5707292138576

R82 A/S
Parallelvej 3
8751 Gedved
Denmark

Tel: +45 79 68 58 88
Fax: +45 75 66 51 92
R82@R82.dk
Web: R82.org

Cvr. Nr.: 16 20 21 85
Swift: JYBA DKKK
Iban No.:DK8072450002003501

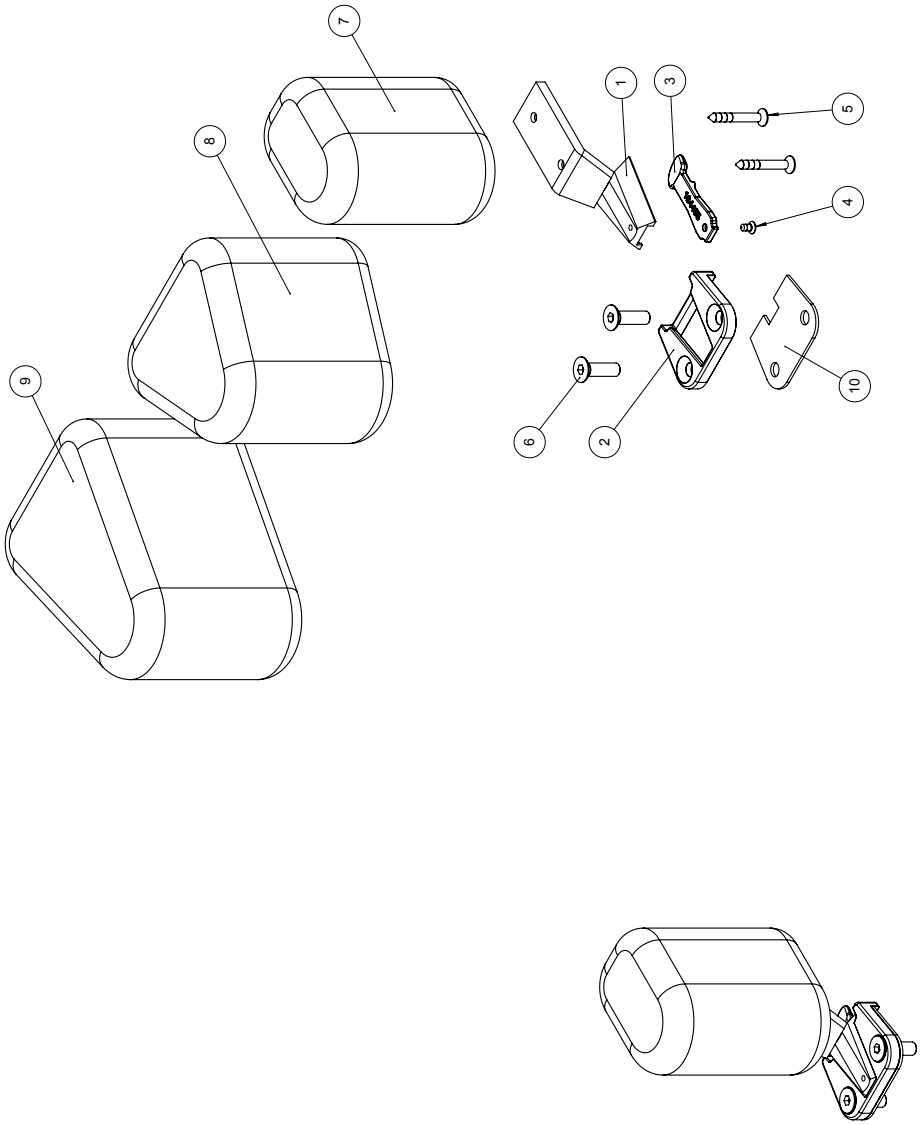

R82 Designed by: Per Hansen Tel.: +45 79 68 58 88 Fax: +45 75 66 51 92 E-mail: R82@R82.dk Web: www.R82.org	Created by TTH	Revision C	Revision by PER
nothing compares to a smile	Created date 06.02.2009		Revision date 30-01-2014
Title Pomme 1 & 2 & 3	Project 1015	Item no 79384	

C:\JEPER\SEAN\Explode\Skig 1015 Stingray\79384

Position	No.	Description	Quantity	Unit of Measure	Ean code
1	76209	Mounting for pommel	PIECES	1	5707292543554
2	76175	Fitting	PIECES	1	5707292503336
3	76176	Safty lock	PIECES	1	5707292503367
4	1811102	M3x6 screw UH	PIECES	1	5707292510648
5	1811275	Screw 4*30MM	PIECES	2	5707292141743
6	0609731	Stainless insex 6*25 UH.	PIECES	2	5707292138514
7	6175110	Pommel, black PUR	PIECES	1	5707292466624
8	6175111	Pommel, black PUR	PIECES	1	5707292189103
9	6175112	Pommel, black PUR	PIECES	1	5707292189110
10	76320	Plate support for dovetail	PIECES	1	5707292543769

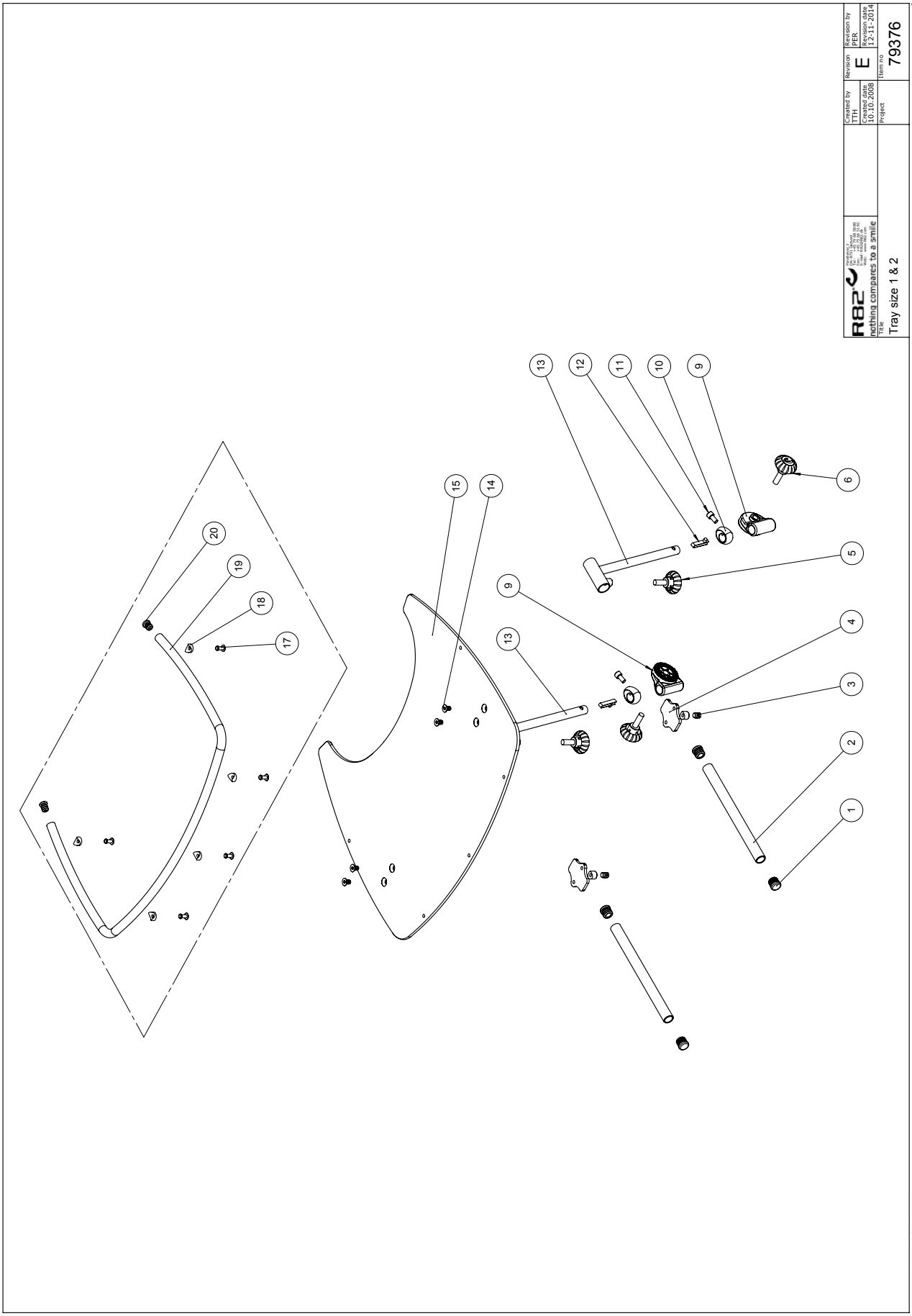
R82
nothing compares to a smile
Created by
TTH
Created date
10.10.2008
Revision
E
Revision by
PER
Revision date
12-11-2014
Title
Tray size 1 & 2
Project
Item no
79376
20
19
18
17
15
14
13
12
11
10
9
9
13
6
5
4
3
2
1

Position	No.	Description	Quantity	Unit of Measure	Ean code
1	2501600	Ferrule d15*1,0 black	PCS	4	5707292143969
2	70866	Pipe Ø16*1,5	PCS	2	5707292103376
3	0806010	Stainless stop screw 6*10	PCS	2	5707292139993
4	70255	Mounting f. Table Tiger	PCS	2	5707292101976
5	3652501	R82 handle M6*16mm screw	PCS	2	5707292413963
6	3501201	R82 handle M8*25mm screw	PCS	2	5707292413932
9	76240	Holder for hand brace	PCS	2	5707292506016
10	76355	Adjustment ring	PCS	2	5707292541765
11	0602190	Insex screw 6*12	PCS	2	5707292138088
12	6153700	Knob spring f.activity centre	PCS	2	5707292188601
13	76213	Bracket welded for tray, right	PCS	2	5707292506115
14	0609720	Stainless insex 6*10	PCS	4	5707292446039
15	76214	Plate for Stingray size 1	PCS	1	5707292505569
15	76219	Plate for Stingray size 2	PCS	1	5707292505576
17	0506508	Rivet 5*14, stainless	PCS	5	5707292359476
18	1310703	Spacer Ø11, Ø5,2, h2,5	PCS	5	5707292517951
19	76215	Rail for tray size 1	PCS	1	5707292517906
19	76216	Rail for tray size 2	PCS	1	5707292517913
20	2501500	Ferrule d12*0,5-1,5 int.black	PCS	2	5707292143952

R82 A/S
Parallelvej 3
8751 Gedved
Denmark

Tel: +45 79 68 58 88
Fax: +45 75 66 51 92
R82@R82.dk
Web: R82.org

Cvr. Nr.: 16 20 21 85
Swift: JYBA DKKK
Iban No.:DK8072450002003501

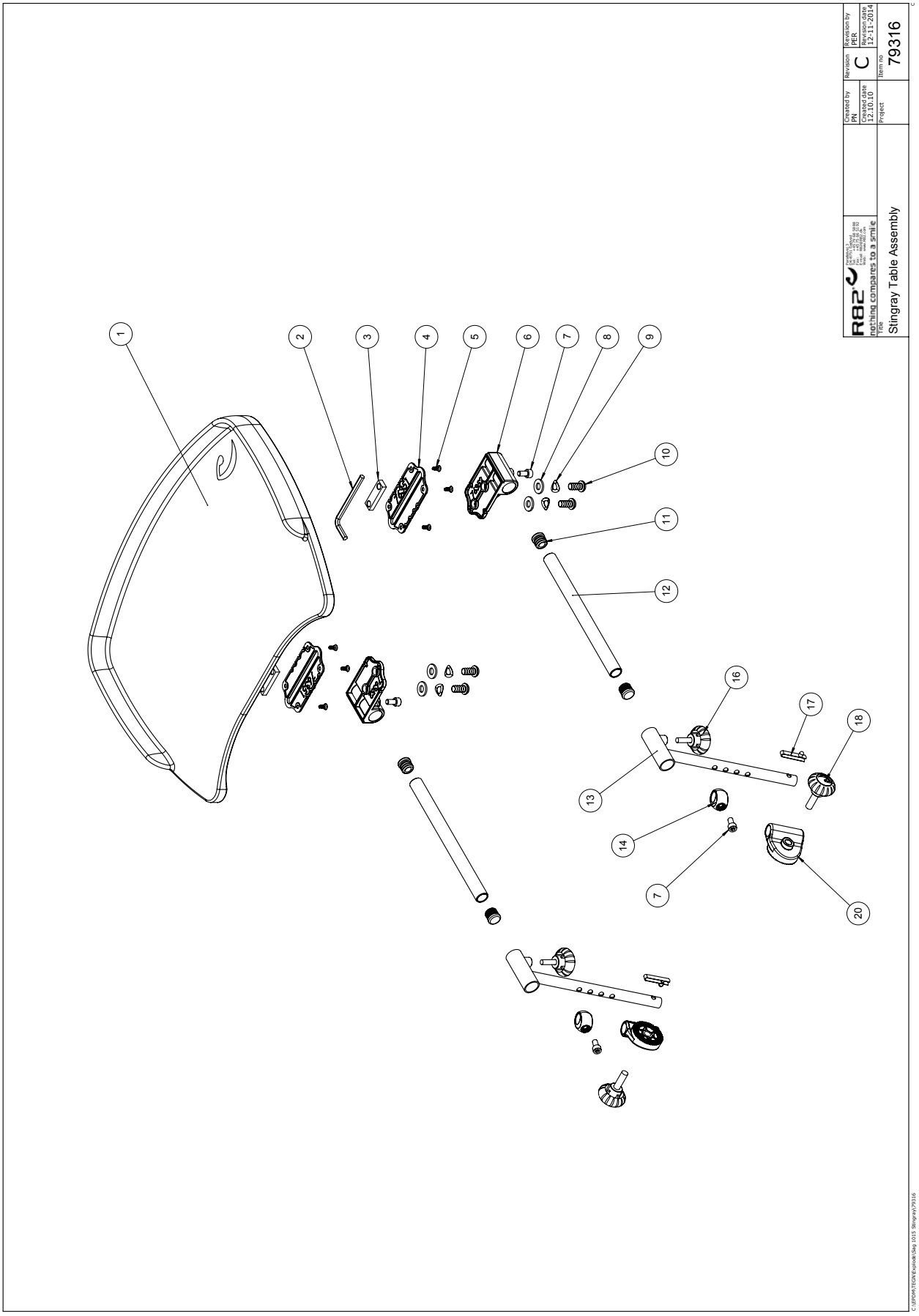
1
2
3
4
5
6
7
8
9
10
11
12
13
14
7
16
17
18
20
R82
nothing compares to a smile
Created by
PN
Created date
12.10.10
Revision
C
Revision by
PER
Revision date
12-11-2014
Title
Stingray Table Assembly
Project
Item no
79316

Position	No.	Description	Quantity	Unit of Measure	Ean code
1	76350	Table for Stingray, Grey	PIECES	1	5707292541727
2	0589500	Insex keys n5	PIECES	1	5707292137869
3	76356	Slidebar 12*40*6, 2x M8	PIECES	2	5707292544339
4	76351	Mounting plate	PIECES	2	5707292541741
5	1940011	Plastite 60, 4*8	PIECES	8	5707292545978
6	76352	Mounting bracket	PIECES	2	5707292541758
7	0602190	Insex screw 6*12	PIECES	4	5707292138088
8	1105080	Stainless washer 8mm	PIECES	4	5707292140364
9	1100500	Spring washer 8mm, stainless	PIECES	4	5707292140142
10	0661500	Button head screw 8*16 stainl.	PIECES	4	5707292139559
11	2501600	Ferrule d15*1,0 black	PIECES	4	5707292143969
12	70866	Pipe Ø16*1,5	PIECES	2	5707292103376
13	76213	Bracket welded for tray, right	PIECES	2	5707292506115
14	76355	Adjustment ring	PIECES	2	5707292541765
16	3652501	R82 handle M6*16mm screw	PIECES	2	5707292413963
17	6153700	Knob spring f.activity centre	PIECES	2	5707292188601
18	3501201	R82 handle M8*25mm screw	PIECES	2	5707292413932
20	76240	Holder for hand brace	PIECES	2	5707292506016

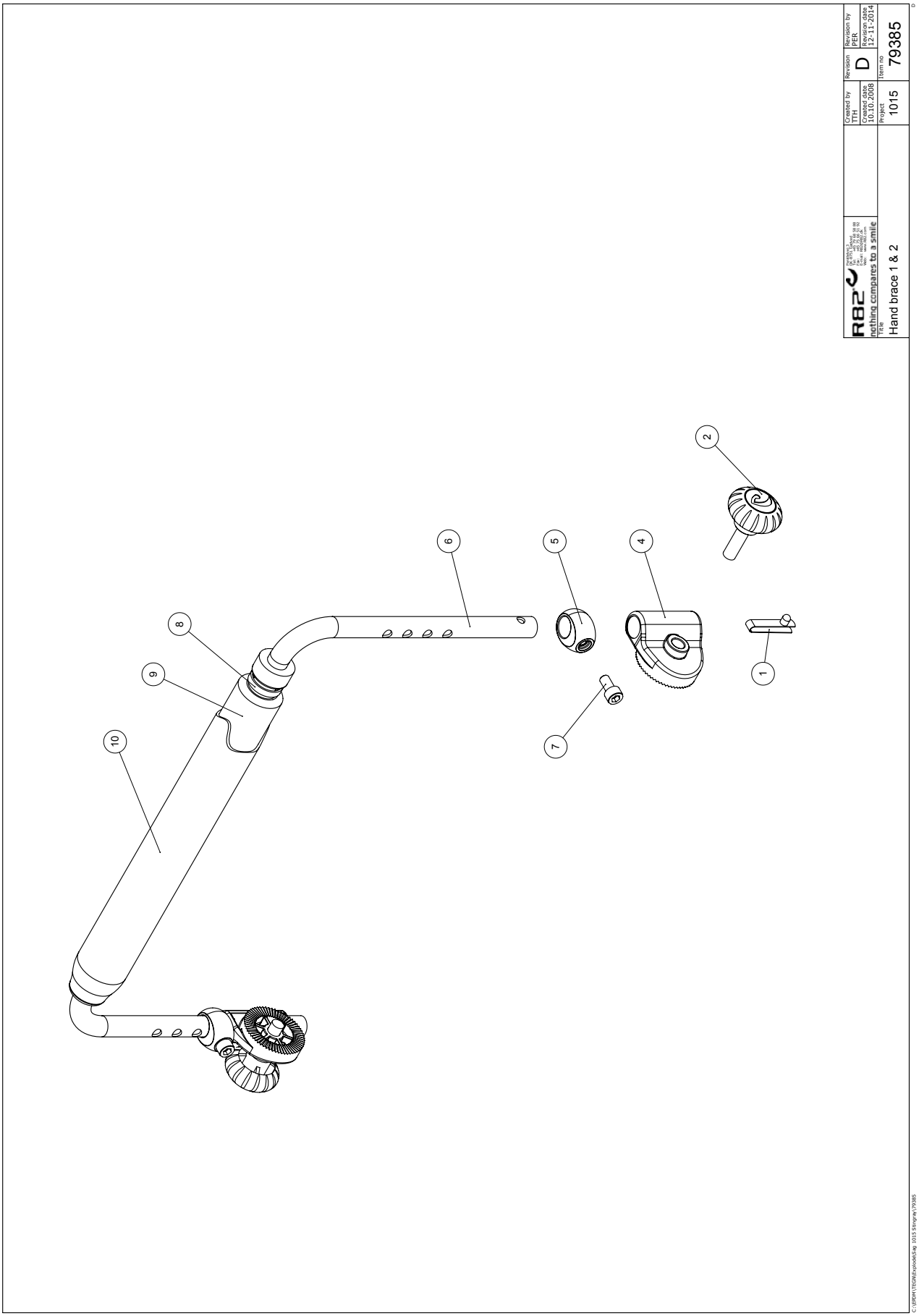
R82
Parallelvej 2
DK-8751 Gedved
Tel.: +45 79 68 58 88
Fax: +45 75 66 51 92
Web: www.R82.com
nothing compares to a smile
Created by
TTH
Created date
10.10.2008
Revision
D
Revision by
PER
Revision date
12-11-2014
Title
Hand brace 1 & 2
Project
1015
Item no
79385
1
2
4
5
6
7
8
9
10

Position	No.	Description	Quantity	Unit of Measure	Ean code
1	6153700	Knob spring	PIECES	2	5707292188601
2	3501201	R82 handle M8*25mm Screw	PIECES	2	5707292413932
4	76240	Holder for hand brace	PIECES	2	5707292506016
5	76242	Distance piece	PIECES	2	5707292505095
6*	76243	Hand brace size 1	PIECES	1	5707292505293
	76244	Hand brace size 2	PIECES	1	5707292505309
7	0658016	Button head M5*16, stainless	PIECES	2	5707292139399
8	0235075	Cable tape, black	PIECES	2	5707292135308
9	4395005	Tube isolation Ø13MM, 2,0M	METER	0,3	5707292522818
10*	8720411	Cover for Handgrip size 1	PIECES	1	5707292524263
	8720412	Cover for Handgrip size 2	PIECES	1	5707292524270